STAMFORD | AvK™

Parts Manual

CURRENT PRODUCTS

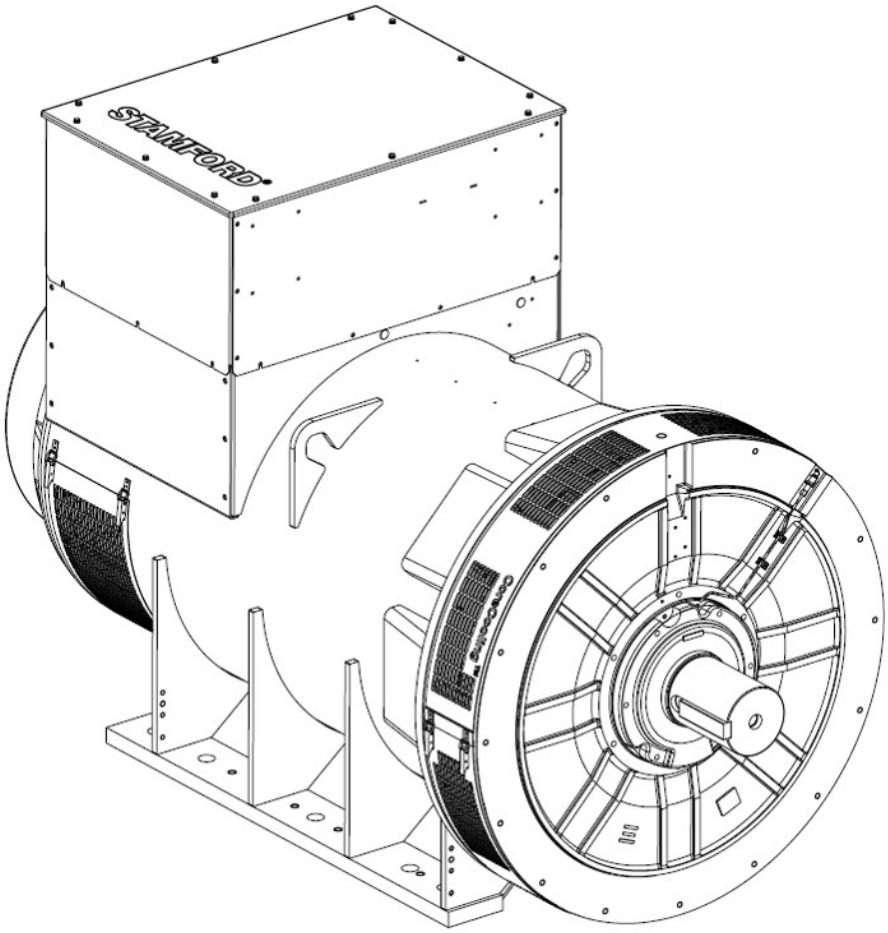

English
Original Instructions

3-2025

A053J574 (Issue 28)

Table of Contents

1. FOREWORD 1
2. PLANNED MAINTENANCE KITS 3
3. P0 - ONE BEARING ALTERNATOR 5
4. P0 - TWO BEARING ALTERNATOR 9
5. P1 - ONE BEARING ALTERNATOR 13
6. P1 - TWO BEARING ALTERNATOR 17
7. S0L1 - ONE BEARING ALTERNATOR 21
8. S0L2 - ONE BEARING ALTERNATOR 25
9. S1L2 - ONE BEARING ALTERNATOR 29
10. UCD22 - ONE BEARING ALTERNATOR 33
11. UCD27 - ONE BEARING ALTERNATOR 37
12. UCI224 - ONE BEARING ALTERNATOR 41
13. UCI224 (C-G) TWO BEARING (4 POLE) ALTERNATOR 45
14. UCI274 (C-H) ONE BEARING ALTERNATOR 49
15. UCI274 (C-H) TWO BEARING (4 POLE) ALTERNATOR 53
16. HC434 (C-F) ONE BEARING ALTERNATOR 57
17. HC434 (C-F) TWO BEARING ALTERNATOR 61
18. S4 (C-F) ONE BEARING ALTERNATOR 65
19. S4 (C-F) TWO BEARING ALTERNATOR 69
20. S4 (G) ONE BEARING (DEDICATED) ALTERNATOR 73
21. HC534 (C-F) ONE BEARING (SER 3-4) ALTERNATOR 77
22. HC534 (C-F) TWO BEARING (SER 3-4) ALTERNATOR 83
23. S5 (C-F) ONE BEARING (DEDICATED) ALTERNATOR 89
24. S5 (G-H) ONE BEARING (DEDICATED) ALTERNATOR 93
25. S5 (C-F) ONE BEARING ALTERNATOR 97
26. S5 (C-F) TWO BEARING ALTERNATOR 101
27. HC634 (G-K) ONE BEARING (SER 3) ALTERNATOR 107

 Copyright © 2025 Cummins Inc.

28. HC634 (G-K) TWO BEARING (SER 3) ALTERNATOR 111
29. S6 (C-H) ONE BEARING (DEDICATED) ALTERNATOR 117
30. S6 (C-H) TWO BEARING (DEDICATED) ALTERNATOR 121
31. P7 (A-G) ONE BEARING ALTERNATOR 125
32. P7 (A-G) TWO BEARING ALTERNATOR 131
33. S7 LV ONE BEARING ALTERNATOR 137
34. S7 LV TWO BEARING ALTERNATOR 143
35. S7 WLV TWO BEARING ALTERNATOR 151
36. S7 HV ONE BEARING ALTERNATOR 157
37. S7 HV TWO BEARING ALTERNATOR 159
38. A7 LV ONE BEARING ALTERNATOR 161
39. A7 LV TWO BEARING ALTERNATOR 165
40. A7 WLV TWO BEARING ALTERNATOR 173
41. P80 ONE BEARING ALTERNATOR 179
42. P80 TWO BEARING ALTERNATOR 181
43. S9 LV ONE BEARING ALTERNATOR 185
44. S9 LV TWO BEARING ALTERNATOR 187
45. S9 HV ONE BEARING ALTERNATOR 191
46. S9 HV TWO BEARING ALTERNATOR 193
47. ACCESSORIES 197

Copyright © 2025 Cummins Inc.

1 Foreword

1.1 General

This manual applies to alternators produced by Cummins Generator Technologies LTD (CGT). Alternators are identified by their model number. Each part or assembly is illustrated and is identified by a reference number corresponding to the list of part numbers in the accompanying table.

Alternator parts that have been modified or added by Cummins are identified in this manual. Contact your nearest authorized distributor for assistance in ordering replacement parts by referring to the item nameplate and supplying all available information.

To access operator manuals and technical information or for technical assistance and service support, visit **www.stamford-avk.com** or contact emea.service@cummins.com.

1.2 Model Identification

This manual covers alternator models produced under the Cummins Generator Technologies LTD (CGT) STAMFORD® branded alternators.

To avoid errors or delay in filling your parts order, always state the MODEL and SERIAL NUMBER from the alternator nameplate.

The alternator serial number is located on a data tag on the alternator.

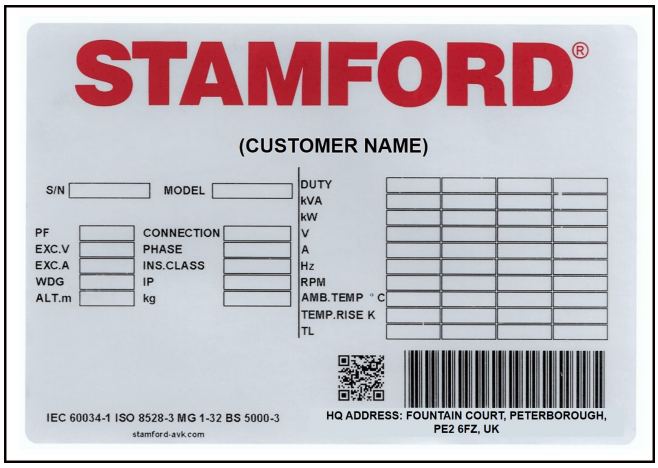

FIGURE 1. ALTERNATOR RATING PLATE

1.3 Abbreviations

Some of the following abbreviations may be used throughout this manual:

AVR - Automatic Voltage Regulator

DE - Drive End

NDE - Non-Drive End

SAE - Society of Automotive Engineers

RTD - Resistance Temperature Detector

CT - Current Transformer

EBS - Excitation Boost System

PMG - Permanent Magnet Generator

QMSN - Quote Manufacturer Serial Number

A/F - Air Filter

FWD/REV - Forward and Reverse

 Copyright © 2025 Cummins Inc.

1.4 Recommended Service Parts

Recommended service part information is now included in the parts information tables. The information includes stock codes for dealers/suppliers and an indication if the part is a recommended service part.

Adding the stock code information to this parts manual removes the requirement for separate Recommended Stock Lists (RSL) documents which will be obsoleted and discontinued for STAMFORD® alternators from 2024.

TABLE 1. PARTS CLASSIFICATION AND TYPE CODES

Classification	Type
A = Recommended Stock at Dealer Level	SC = System Critical
B = Recommended Stock at Distributor Level	M = Maintenance
C = Recommended Stock at PDC Level	R = Repair

2 Planned Maintenance Kits

Recommended parts kits for the 30,000 hour service interval / 5 years maintenance.

TABLE 2. PLANNED MAINTENANCE KITS

Model(s)	Bearings	Description	Part No.	Qty.
S1, P0, P1	1	30,000 Hour Service Kit	A051C107	1
P0, P1	2	30,000 Hour Service Kit	A051C115	1
S0	1	30,000 Hour Service Kit	A054N489	1
UC22	1	30,000 Hour Service Kit	A051C212	1
UC22	2	30,000 Hour Service Kit	A051C216	1
UC27	1	30,000 Hour Service Kit	A051C218	1
UC27	2	30,000 Hour Service Kit	A051C222	1
HC4, S4	1	30,000 Hour Service Kit	A051C225	1
HC4, S4	2	30,000 Hour Service Kit	A051C230	1
HC5, S5, S5L1D	1	30,000 Hour Service Kit (Sealed)	A051C232	1
HC5, S5	2	30,000 Hour Service Kit (Sealed)	A051C234	1
HC5, S5	1	30,000 Hour Service Kit (Regreasable)	A051Z125	1
HC5, S5	2	30,000 Hour Service Kit (Regreasable)	A051Z131	1
HC6, S6, S6L1D G-H Cores	1	30,000 Hour Service Kit (Sealed)	A051C237	1
HC6, S6, S6L1D G-H Cores	2	30,000 Hour Service Kit (Sealed)	A051C243	1
S6L1D C-F Cores	2	30,000 Hour Service Kit (Sealed)	A059R029	1
HC6, S6	1	30,000 Hour Service Kit (Regreasable)	A051Z133	1
HC6, S6	2	30,000 Hour Service Kit (Regreasable)	A051Z137	1
P7, S7	1	30,000 Hour Service Kit (Sealed)	A051Z145	1
P7, S7 A-J Cores,	1	30,000 Hour Service Kit (Regreasable)	A051C251	1
S7 K Core	1	30,000 Hour Service Kit (Regreasable)	A076H555	1
P7 A-E Cores	2	30,000 Hour Service Kit (Regreasable)	A051C255	1
P7 F-G Cores, S7 G-J Cores	2	30,000 Hour Service Kit (Regreasable)	A051C257	1
S7 K Core	2	30,000 Hour Service Kit	A076H557	1
P80	1	30,000 Hour Service Kit	A051C282	1
P80 RST Cores	2	30,000 Hour Service Kit	A051C285	1
P80 XYZ Cores	2	30,000 Hour Service Kit	A051C291	1
S9	1	30,000 Hour Service Kit	A065P433	1
S9 B-D Cores	2	30,000 Hour Service Kit	A065P434	1

 Copyright © 2025 Cummins Inc.

Model(s)	Bearings	Description	Part No.	Qty.
S9 E-F Cores	2	30,000 Hour Service Kit	A065P435	1
S9 G-H Cores	2	30,000 Hour Service Kit	A065P436	1

Copyright © 2025 Cummins Inc.

3 P0 - One Bearing Alternator

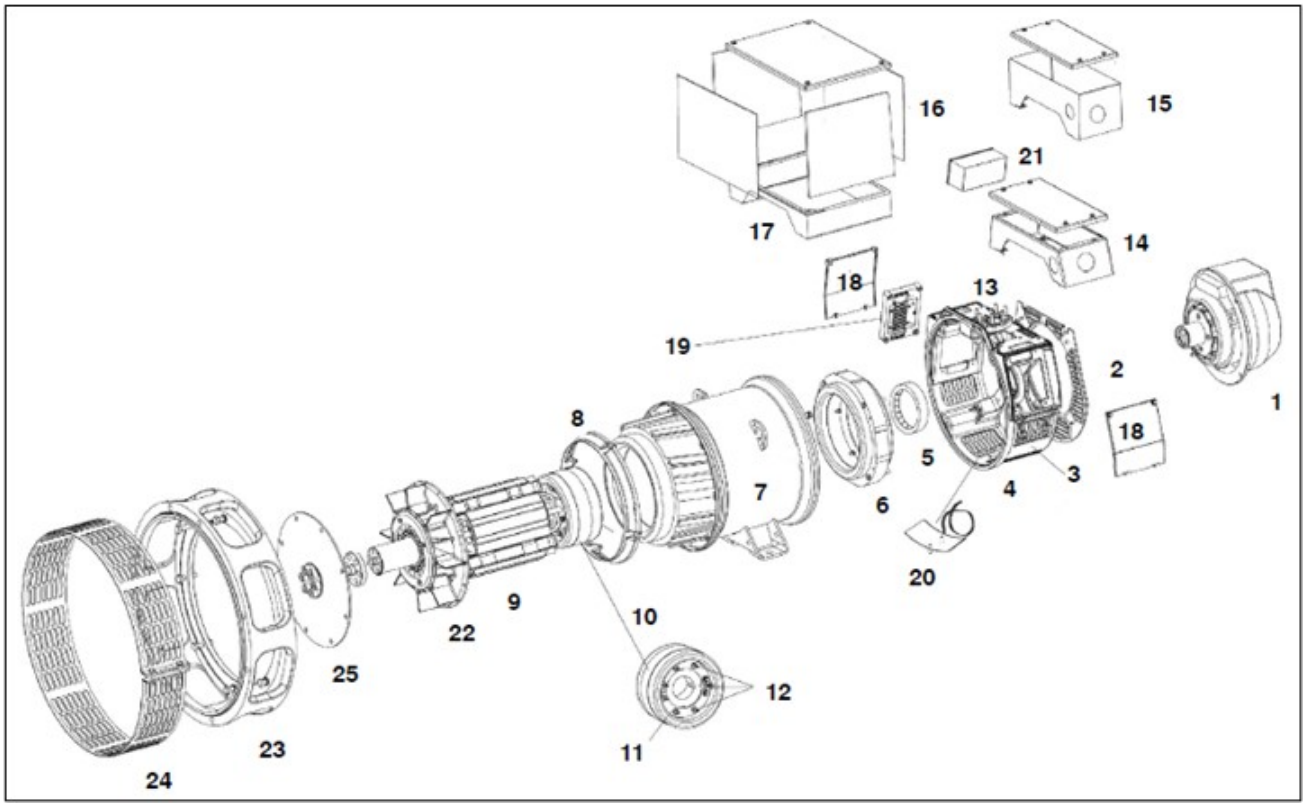

FIGURE 2. P0 - ONE BEARING ALTERNATOR PARTS DRAWING

TABLE 3. P0 - ONE BEARING ALTERNATOR PARTS LIST

Item	Part No.	Description	Qty.	Recommended Service Part	RSL Class	RSL Type
1	E000-14831	EBS Module Only For 45-1210 And 45-1212	1	-	-	-
1	E000-14851	EBS Module Only For 45-1211 And 45-1213	1	-	-	-
1	45-1210	EBS Unit (4 Pole)	1	Yes	A	SC
1	45-1211	EBS Unit (Cummins PCC 1302-4 Pole)	1	Yes	A	SC
1	45-1212	EBS Unit (2 Pole)	1	Yes	A	SC
1	45-1213	EBS Unit (Cummins PCC 1302-2 Pole)	1	Yes	A	SC
2	191-10045	NDE Cover For Use Without EBS (Not Shown)	1	-	-	-
2	191-10061	NDE Cover For Use With EBS	1	-	-	-
3	190-10018	NDE End Bracket Bottom Cover	1	-	-	-
4	190-10025	NDE End Bracket	1	-	-	-

 Copyright © 2025 Cummins Inc.

Item	Part No.	Description	Qty.	Recommended Service Part	RSL Class	RSL Type
5	45-0866	Bearing Kit	1	Yes	B	M
6	190-1038	Exciter Stator 20 mm (D-F)	1	Yes	A	SC
6	190-1039	Exciter Stator 25 mm (G-H)	1	Yes	A	SC
6	A052f554	Exciter Stator 20 mm Severe Environmental	1	Yes	A	SC
6	A052F649	Exciter Stator 25 mm Severe Environmental	1	Yes	A	SC
7	QMSN	Stator Frame Assembly	1	-	-	-
8	191-10091	Air Flow Baffle	1	-	-	-
9	QMSN	Rotor Shaft Assembly	1	-	-	-
10	190-1040	Exciter Rotor 20 mm (D-F)	1	Yes	A	SC
10	190-1041	Exciter Rotor 25 mm (G-H)	1	Yes	A	SC
11	45-0427	Rotating Rectifier Assembly	1	Yes	A	SC
12	RSK-1101	Diode Forward/Reverse And Varistor Kit	1	Yes	A	SC
13	191-10057	Terminal Board	1	-	-	-
14	45-1165	Standard Terminal Box Kit (D)	1	-	-	-
15	45-1206	Tall Terminal Box Kit	1	-	-	-
16	45-1166	Large Terminal Box Kit	1	-	-	-
17	45-1175	Terminal Box Plinth (Included In Item 16)	1	-	-	-
18	190-10027	AVR Cover	2	-	-	-
19	E000-14808/1P	AVR AS480 UL Approved Only Supplied	1	Yes	A	SC
20	45-1161	Heater Kit 230 V	1	-	-	-
20	45-1162	Heater Kit 115 V	1	-	-	-
20	45-1163	Heater Kit 24 V	1	-	-	-
20	45-1164	Heater Kit 12 V	1	-	-	-
20	A040G608	Heater Kit 230 V To Include Terminal Box For Retrofit	1	-	-	-
20	A040G612	Heater Kit 115 V To Include Terminal Box For Retrofit	1	-	-	-
20	A040G614	Heater Kit 24 V To Include Terminal Box For Retrofit	1	-	-	-
20	A040G618	Heater Kit 12 V To Include Terminal Box For Retrofit	1	-	-	-
21	45-1205	Heater Terminal Box For Retrofit Not Included In Heater Kits (Item 20)	1	-	-	-

Copyright © 2025 Cummins Inc.

Item	Part No.	Description	Qty.	Recommended Service Part	RSL Class	RSL Type
22	191-10042	Fan 290 mm	1	-	-	-
23	45-1190	Adaptor Kit SAE 2	1	-	-	-
23	45-1191	Adaptor Kit SAE 3	1	-	-	-
23	45-1192	Adaptor Kit SAE 4 (D-G)	1	-	-	-
23	45-1193	Adaptor Kit SAE 5	1	-	-	-
23	45-1194	Adaptor Kit SAE 6	1	-	-	-
23	45-1195	Adaptor Kit SAE 5 (Spacer 26 Wide Lister Alpha)	1	-	-	-
23	45-1196	Adaptor Kit SAE 5 (Spacer 51.5 Wide Lister Alpha)	1	-	-	-
23	45-1197	Adaptor Kit SAE 4 (Spacer 28.5)	1	-	-	-
23	45-1198	Adaptor Kit (AIFO)	1	-	-	-
23	45-1199	Adaptor Kit (GM)	1	-	-	-
24	See Item 19	Adaptor Screen Included In Kit	1	-	-	-
25	45-1170	Coupling Kit SAE 6.5 (3 mm)	1	-	-	-
25	45-1171	Coupling Kit SAE 7.5	1	-	-	-
25	45-1172	Coupling Kit SAE 8 (3 mm)	1	-	-	-
25	45-1173	Coupling Kit SAE 10 (3 mm)	1	-	-	-
25	45-1181	Coupling Kit SAE 6.5 (3 mm) (For SAE 6 Adaptor)	1	-	-	-
25	45-1183	Coupling Kit SAE 6.5 (Dished Disc) An13.3	1	-	-	-
25	45-1184	Coupling Kit SAE 7.5 (Dished Disc) An13.3	1	-	-	-
25	45-1185	Coupling Kit SAE 6.5 (Dished Disc) An30.2	1	-	-	-
25	45-1186	Coupling Kit SAE 7.5 (Dished Disc) An30.2	1	-	-	-
25	45-1188	Coupling Kit (GM Adaptor Up To G)	1	-	-	-
25	45-1204	Coupling Kit SAE 7.5 (3 mm) (D)	1	-	-	-
25	45-1209	Coupling Kit SAE 7.5 (3 mm) (D)	1	-	-	-
Not Shown	A046Z017	Anti fretting Paste	1	Yes	-	-

 Copyright © 2025 Cummins Inc.

This page is intentionally blank.

4 P0 - Two Bearing Alternator

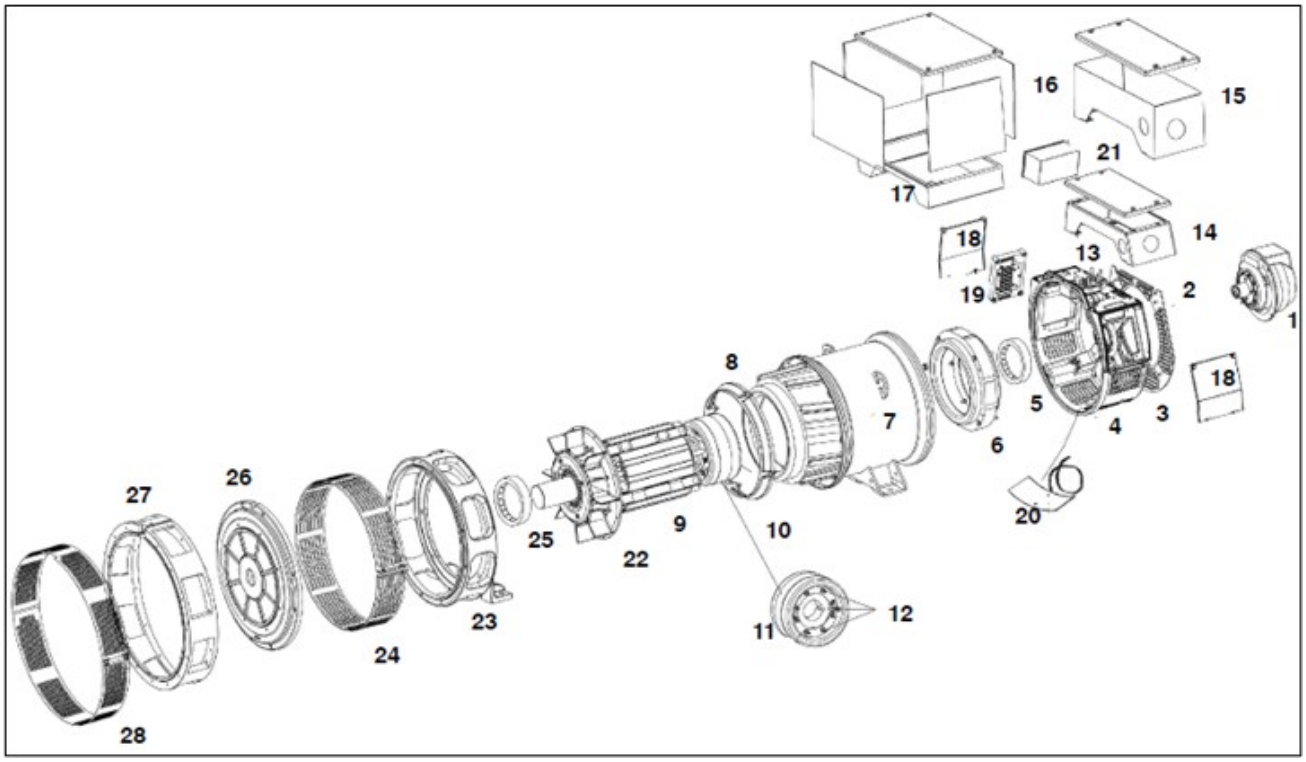

FIGURE 3. P0 - TWO BEARING ALTERNATOR PARTS DRAWING

TABLE 4. P0 - TWO BEARING ALTERNATOR PARTS LIST

Item	Part No.	Description	Qty.	Recommended Service Part	RSL Class	RSL Type
1	45-1210	EBS Unit (4 Pole)	1	Yes	A	SC
1	45-1211	EBS Unit (Cummins PCC 1302-4 Pole)	1	Yes	A	SC
1	45-1212	EBS Unit (2 Pole)	1	Yes	A	SC
1	45-1213	EBS Unit (Cummins PCC 1302-2 Pole)	1	Yes	A	SC
1	E000-14831	EBS Module Only For 45-1210 and 45-1212	1	-	-	-
1	E000-14851	EBS Module Only For 45-1211 And 45-1214	1	-	-	-
2	191-10045	NDE Cover For Use Without EBS (Not Shown)	1	-	-	-
2	191-10061	NDE Cover For Use With EBS	1	-	-	-
3	190-10018	NDE End Bracket Bottom Cover	1	-	-	-
4	190-10025	NDE End Bracket	1	-	-	-
5	45-0866	Bearing Kit	1	Yes	B	M

 Copyright © 2025 Cummins Inc.

Item	Part No.	Description	Qty.	Recommended Service Part	RSL Class	RSL Type
6	190-1038	Exciter Stator 20 mm (D-F)	1	Yes	A	SC
6	190-1039	Exciter Stator 25 mm (G-H)	1	Yes	A	SC
6	A052F554	Exciter Stator 20 mm Severe Environmental	1	Yes	A	SC
6	A052F650	Exciter Stator 25 mm Severe Environmental	1	Yes	A	SC
7	QMSN	Stator Frame Assembly	1	-	-	-
8	191-10091	Air Flow Baffle	1	-	-	-
9	QMSN	Rotor Shaft Assembly	1	-	-	-
10	190-1040	Exciter Rotor 20 mm (D-F)	1	Yes	A	SC
10	190-1041	Exciter Rotor 25 mm (G-H)	1	Yes	A	SC
11	45-0427	Rotating Rectifier Assembly	1	Yes	A	SC
12	RSK-1101	Diode Forward/Reverse And Varistor Kit	1	Yes	A	SC
13	191-10057	Terminal, Board	1	-	-	-
14	45-1165	Standard Terminal Box Kit (D)	1	-	-	-
15	45-1206	Tall Terminal Box Kit	1	-	-	-
16	45-1166	Large Terminal Box Kit	1	-	-	-
17	45-1175	Terminal Box Plinth (Included in Item 16)	1	-	-	-
18	190-10027	AVR Cover	2	-	-	-
19	E000-14808/1P	AVR AS480 UL Approved Only Supplied	1	Yes	A	SC
20	45-1161	Heater Kit 230 V	1	-	-	-
20	45-1162	Heater Kit 115 V	1	-	-	-
20	45-1163	Heater Kit 24 V	1	-	-	-
20	45-1164	Heater Kit 12 V	1	-	-	-
20	A040G608	Heater Kit 230 V To Include Terminal Box for Retrofit	1	-	-	-
20	A040G612	Heater Kit 115 V To Include Terminal Box For Retrofit	1	-	-	-
20	A040G614	Heater Kit 24 V To Include Terminal Box For Retrofit	1	-	-	-
20	A040G618	Heater Kit 12 V To Include Terminal Box For Retrofit	1	-	-	-
21	45-1205	Heater Terminal Box for Retrofit Not Included In Heater Kits (Item 20)	1	-	-	-
22	191-10042	Fan 290 mm	1	-	-	-

Copyright © 2025 Cummins Inc.

Item	Part No.	Description	Qty.	Recommended Service Part	RSL Class	RSL Type
23	190-10043	DE Bracket	1	-	-	-
24	190-10016	DE Screen	1	-	-	-
25	45-0363	DE Bearing Kit	1	-	-	-
26	190-10044	DE End-Plate	1	-	-	-
27	45-1200	Adaptor Kit SAE 2	1	-	-	-
27	45-1201	Adaptor Kit SAE 3	1	-	-	-
27	45-1202	Adaptor Kit SAE 4	1	-	-	-
27	45-1203	Adaptor Kit SAE 5	1	-	-	-
28	See Item 27	Adaptor Screen Included In Kit	1	-	-	-

 Copyright © 2025 Cummins Inc.

This page is intentionally blank.

5 P1 - One Bearing Alternator

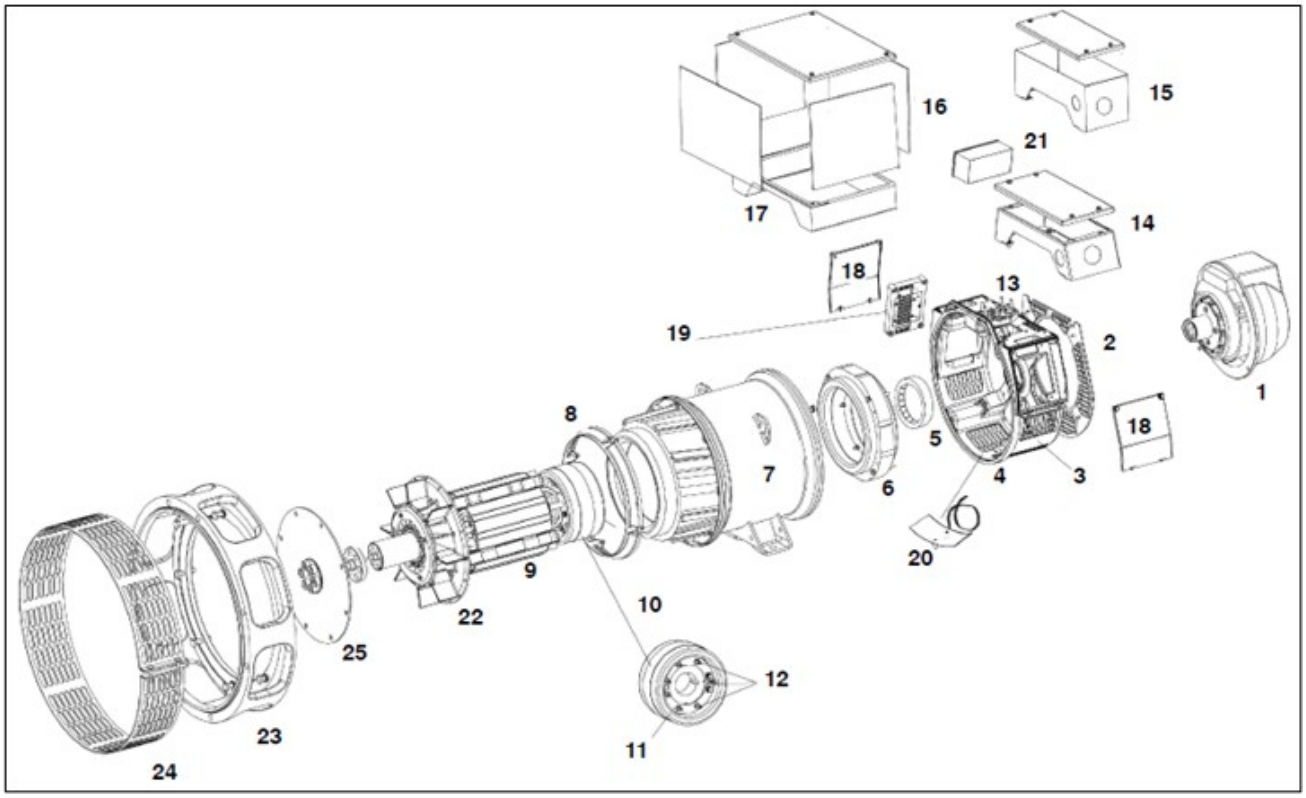

FIGURE 4. P1 - ONE BEARING ALTERNATOR PARTS DRAWING

TABLE 5. P1 - ONE BEARING ALTERNATOR PARTS LIST

Item	Part No.	Description	Qty.	Recommended Service Part	RSL Class	RSL Type
1	45-1210	EBS Unit (4 Pole)	1	Yes	A	SC
1	45-1211	EBS Unit (Cummins PCC 1302-4 Pole)	1	Yes	A	SC
1	45-1212	EBS Unit (2 Pole)	1	Yes	A	SC
1	45-1213	EBS Unit (Cummins PCC 1302-2 Pole)	1	Yes	A	SC
1	E000-14831	EBS Module Only For 45-1210 And 45-1212	1	-	-	-
1	E000-14851	EBS Module Only For 45-1211 And 45-1213	1	-	-	-
2	191-10045	NDE Cover For Use Without EBS (Not Shown)	1	-	-	-
2	191-10061	NDE Cover For Use With EBS	1	-	-	-
3	190-10018	NDE Endbracket Bottom Cover (D)	1	-	-	-
3	190-10035	NDE Endbracket Bottom Cover (E-K)	1	-	-	-

 Copyright © 2025 Cummins Inc.

Item	Part No.	Description	Qty.	Recommended Service Part	RSL Class	RSL Type
4	190-10025	NDE Endbracket (D)	1	-	-	-
4	191-10055	NDE Endbracket (E-K)	1	-	-	-
5	45-0866	Bearing Kit	1	Yes	B	M
6	190-1039	Exciter Stator 25 mm (D)	1	Yes	A	SC
6	191-1067	Exciter Stator 30 mm (E)	1	Yes	A	SC
6	191-1068	Exciter Stator 34 mm (F-G)	1	Yes	A	SC
6	191-1069	Exciter Stator 38 mm (H-K)	1	Yes	A	SC
6	A052F650	Exciter Stator 25 mm Severe Environmental (D)	1	Yes	A	SC
6	A052F652	Exciter Stator 30 mm Severe Environmental (E)	1	Yes	A	SC
6	A052F660	Exciter Stator 34 mm Severe Environmental (F-G)	1	Yes	A	SC
6	A052F805	Exciter Stator 38 mm Severe Environmental (H-K)	1	Yes	A	SC
7	QMSN	Stator Frame Assembly	1	-	-	-
8	191-10091	Air Flow Baffle	1	-	-	-
9	QMSN	Rotor Shaft Assembly	1	-	-	-
10	190-1041	Exciter Rotor 25 mm (G-H)	1	Yes	A	SC
10	191-1063	Exciter Rotor 34 mm (F-G)	1	Yes	A	SC
10	191-1064	Exciter Rotor 38 mm (H-K)	1	Yes	A	SC
10	191-1072	Exciter Rotor 30 mm (E)	1	Yes	A	SC
11	45-0427	Rotating Rectifier Assembly	1	Yes	A	SC
12	RSK-1101	Diode Forward/Reverse And Varistor Kit	1	Yes	A	SC
13	191-10057	Terminal, Board	1	-	-	-
14	45-1165	Standard Terminal Box Kit (D)	1	-	-	-
14	45-1168	Standard Terminal Box Kit (E-K)	1	-	-	-
14	45-1169	Standard Terminal Box Kit CPG Set (E-K)	1	-	-	-
15	45-1206	Tall Terminal Box Kit	1	-	-	-
16	45-1166	Large Terminal Box Kit Including Plinth (D)	1	-	-	-
16	45-1167	Large Terminal Box Kit Including Plinth (E-K)	1	-	-	-
17	45-1175	Terminal Box Plinth (D)	1	-	-	-
17	45-1176	Terminal Box Plinth (E-K)	1	-	-	-
18	190-10027	AVR Cover (D)	2	-	-	-

Copyright © 2025 Cummins Inc.

Item	Part No.	Description	Qty.	Recommended Service Part	RSL Class	RSL Type
18	191-10056	AVR Cover (E-K)	2	-	-	-
19	E000-14808/1P	AVR AS480 UL Approved Only Supplied	1	Yes	A	SC
20	45-1161	Heater Kit 230 V	1	-	-	-
20	45-1162	Heater Kit 115 V	1	-	-	-
20	45-1163	Heater Kit 24 V	1	-	-	-
20	45-1164	Heater Kit 12 V	1	-	-	-
20	A040G608	Heater Kit 230 V To Include Terminal Box For Retrofit	1	-	-	-
20	A040G612	Heater Kit 115 V To Include Terminal Box For Retrofit	1	-	-	-
20	A040G614	Heater Kit 24 V To Include Terminal Box For Retrofit	1	-	-	-
20	A040G618	Heater Kit 12 V To Include Terminal Box For Retrofit	1	-	-	-
21	45-1205	Heater Terminal Box For Retrofit Not Included In Heater Kits (Item 20)	1	-	-	-
22	191-10042	Fan 290 mm (D-G)	1	-	-	-
22	191-10059	Fan 344 mm (H-K)	1	-	-	-
23	45-1190	Adaptor Kit SAE 2	1	-	-	-
23	45-1191	Adaptor Kit SAE 3	1	-	-	-
23	45-1192	Adaptor Kit SAE 4 (D-G)	1	-	-	-
23	45-1193	Adaptor Kit SAE 5	1	-	-	-
23	45-1194	Adaptor Kit SAE 6	1	-	-	-
23	45-1195	Adaptor Kit SAE 5 (Spacer 26 Wide Lister Alpha)	1	-	-	-
23	45-1196	Adaptor Kit SAE 5 (Spacer 51.5 Wide Lister Alpha)	1	-	-	-
23	45-1197	Adaptor Kit SAE 4 (Spacer 28.5)	1	-	-	-
23	45-1198	Adaptor Kit (AIFO)	1	-	-	-
23	45-1199	Adaptor Kit (GM)	1	-	-	-
24	See Item 23	Adaptor Screen Included In Kit	1	-	-	-
25	45-1170	Coupling Kit SAE 6.5 (3 mm)	1	-	-	-
25	45-1171	Coupling Kit SAE 7.5	1	-	-	-
25	45-1172	Coupling Kit SAE 8 (3 mm)	1	-	-	-
25	45-1173	Coupling Kit SAE 10 (3 mm)	1	-	-	-

 Copyright © 2025 Cummins Inc.

Item	Part No.	Description	Qty.	Recommended Service Part	RSL Class	RSL Type
25	45-1174	Coupling Kit SAE 11.5 (3 mm)	1	-	-	-
25	45-1180	Coupling Kit Lister/Alpha (Use With 45-1195 Only)	1	-	-	-
25	45-1181	Coupling Kit SAE 6.5 (3 mm) (For SAE 6 Adaptor)	1	-	-	-
25	45-1183	Coupling Kit SAE 6.5 (Dished Disc) AN13.3	1	-	-	-
25	45-1184	Coupling Kit SAE 7.5 (Dished Disc) AN13.3	1	-	-	-
25	45-1185	Coupling Kit SAE 6.5 (Dished Disc) AN30.2	1	-	-	-
25	45-1186	Coupling Kit SAE 7.5 (Dished Disc) AN30.2	1	-	-	-
25	45-1188	Coupling Kit (GM Adaptor Up To G)	1	-	-	-
25	45-1204	Coupling Kit SAE 7.5 (Kubota) (1.2 mm)	1	-	-	-
25	45-1209	Coupling Kit SAE 7.5 (3 mm) (D)	1	-	-	-

Copyright © 2025 Cummins Inc.

6 P1 - Two Bearing Alternator

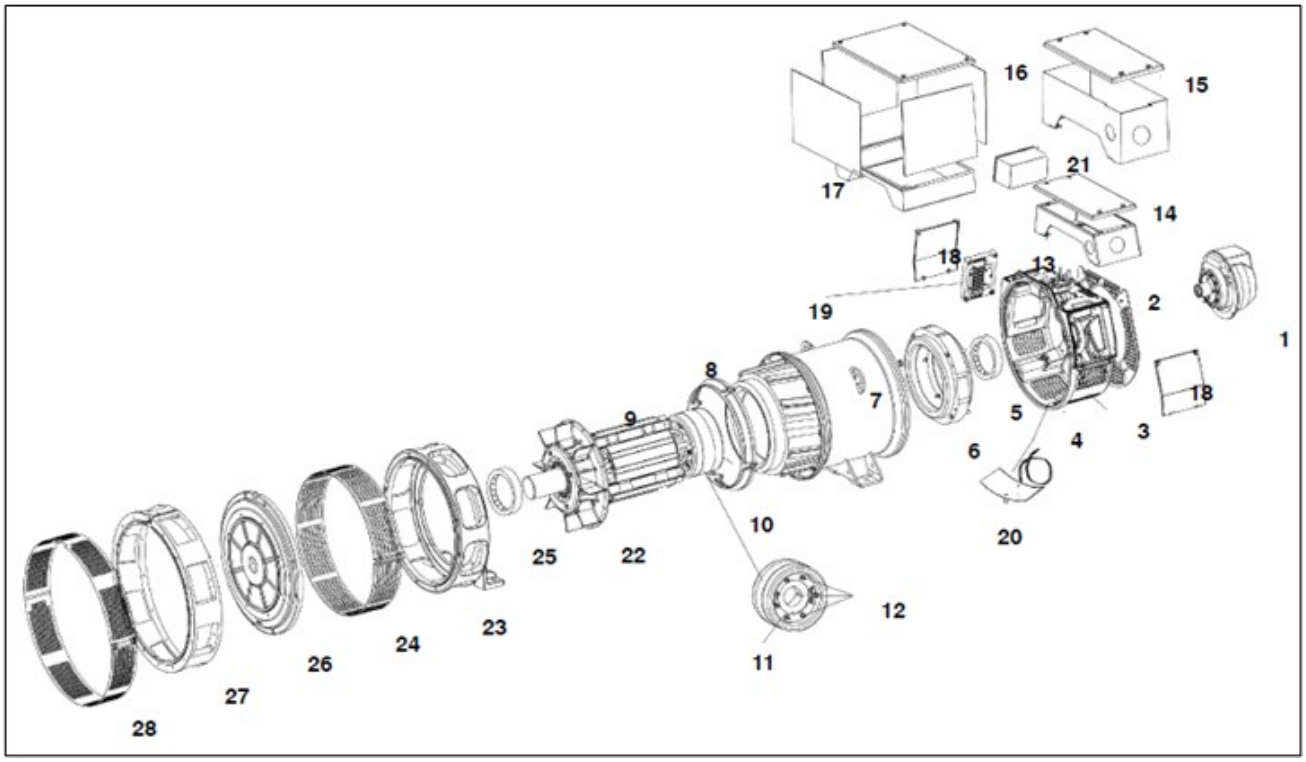

FIGURE 5. P1 - TWO BEARING ALTERNATOR PARTS DRAWING

TABLE 6. P1 - TWO BEARING ALTERNATOR PARTS LIST

Item	Part No.	Description	Qty.	Recommended Service Part	RSL Class	RSL Type
1	45-1210	EBS Unit (4 Pole)	1	Yes	A	SC
1	45-1211	EBS Unit (Cummins PCC 1302-4 Pole)	1	Yes	A	SC
1	45-1212	EBS Unit (2 Pole)	1	Yes	A	SC
1	45-1213	EBS Unit (Cummins PCC 1302-2 Pole)	1	Yes	A	SC
1	E000-14831	EBS Module Only For 45-1210 And 45-1212	1	-	-	-
1	E000-14851	EBS Module Only For 45-1211 And 45-1213	1	-	-	-
2	191-10045	NDE Cover For Use Without EBS (Not Shown)	1	-	-	-
2	191-10061	NDE Cover For Use With EBS	1	-	-	-
3	190-10018	NDE Endbracket Bottom Cover (D)	1	-	-	-
3	190-10035	NDE Endbracket Bottom Cover (F-K)	1	-	-	-

 Copyright © 2025 Cummins Inc.

Item	Part No.	Description	Qty.	Recommended Service Part	RSL Class	RSL Type
4	190-10025	NDE Endbracket (D)	1	-	-	-
4	191-10055	NDE Endbracket (E-K)	1	-	-	-
5	45-0866	Bearing Kit	1	Yes	B	M
6	190-1039	Exciter Stator 25 mm (D)	1	Yes	A	SC
6	191-1067	Exciter Stator 30 mm (E)	1	Yes	A	SC
6	191-1068	Exciter Stator 34 mm (F-G)	1	Yes	A	SC
6	191-1069	Exciter Stator 38 mm (H-K)	1	Yes	A	SC
6	A052F650	Exciter Stator 25 mm Severe Environmental (D)	1	Yes	A	SC
6	A052F652	Exciter Stator 30 mm Severe Environmental (E)	1	Yes	A	SC
6	A052F660	Exciter Stator 34 mm Severe Environmental (F-G)	1	Yes	A	SC
6	A052F805	Exciter Stator 38 mm Severe Environmental (H-K)	1	Yes	A	SC
7	QMSN	Stator Frame Assembly	1	-	-	-
8	191-10091	Air Flow Baffle	1	-	-	-
9	QMSN	Rotor Shaft Assembly	1	-	-	-
10	190-1041	Exciter Rotor 25 mm (D)	1	Yes	A	SC
10	191-1063	Exciter Rotor 34 mm (F-G)	1	Yes	A	SC
10	191-1064	Exciter Rotor 38 mm (H-K)	1	Yes	A	SC
10	191-1072	Exciter Rotor 30 mm (E)	1	Yes	A	SC
11	45-0427	Rotating Rectifier Assembly	1	Yes	A	SC
12	RSK-1101	Diode Forward/Reverse And Varistor Kit	1	Yes	A	SC
13	191-10057	Terminal, Board	1	-	-	-
14	45-1165	Standard Terminal Box Kit (D)	1	-	-	-
14	45-1168	Standard Terminal Box Kit (E-K)	1	-	-	-
14	45-1169	Standard Terminal Box Kit CPG Set (E-K)	1	-	-	-
15	45-1206	Tall Terminal Box Kit	1	-	-	-
16	45-1166	Large Terminal Box Kit Including Plinth (D)	1	-	-	-
16	45-1167	Large Terminal Box Kit Including Plinth (E-K)	1	-	-	-
17	45-1175	Terminal Box Plinth (D)	1	-	-	-
17	45-1176	Terminal Box Plinth (E-K)	1	-	-	-
18	190-10027	AVR Cover (D)	2	-	-	-

Copyright © 2025 Cummins Inc.

Item	Part No.	Description	Qty.	Recommended Service Part	RSL Class	RSL Type
18	191-10056	AVR Cover (E-K)	2	-	-	-
19	E000-14808/1P	AVR AS480 UL Approved Only Supplied	1	Yes	A	SC
20	45-1161	Heater Kit 230 V	1	-	-	-
20	45-1162	Heater Kit 115 V	1	-	-	-
20	45-1163	Heater Kit 24 V	1	-	-	-
20	45-1164	Heater Kit 12 V	1	-	-	-
20	A040G608	Heater Kit 230 V To Include Terminal Box For Retrofit	1	-	-	-
20	A040G612	Heater Kit 115 V To Include Terminal Box For Retrofit	1	-	-	-
20	A040G614	Heater Kit 24 V To Include Terminal Box For Retrofit	1	-	-	-
20	A040G618	Heater Kit 12 V To Include Terminal Box For Retrofit	1	-	-	-
21	45-1205	Heater Terminal Box For Retrofit Not Included In Heater Kits (Item 20)	1	-	-	-
22	191-10042	Fan 290 mm (D-G)	1	-	-	-
22	191-10059	Fan 290 mm (H-K)	1	-	-	-
23	191-10119	DE Bracket	1	-	-	-
24	191-10029	DE Bracket Screen	1	-	-	-
25	45-0363	DE Bearing Kit	1	-	-	-
26	191-10029	DE Endplate (D-G)	1	-	-	-
27	45-1200	Adaptor Kit SAE 2	1	-	-	-
27	45-1201	Adaptor Kit SAE 3	1	-	-	-
27	45-1202	Adaptor Kit SAE 4	1	-	-	-
27	45-1203	Adaptor Kit SAE 5	1	-	-	-
28	See Item 27	Adaptor Screen Included In Kit	1	-	-	-

 Copyright © 2025 Cummins Inc.

This page is intentionally blank.

7 S0L1 - One Bearing Alternator

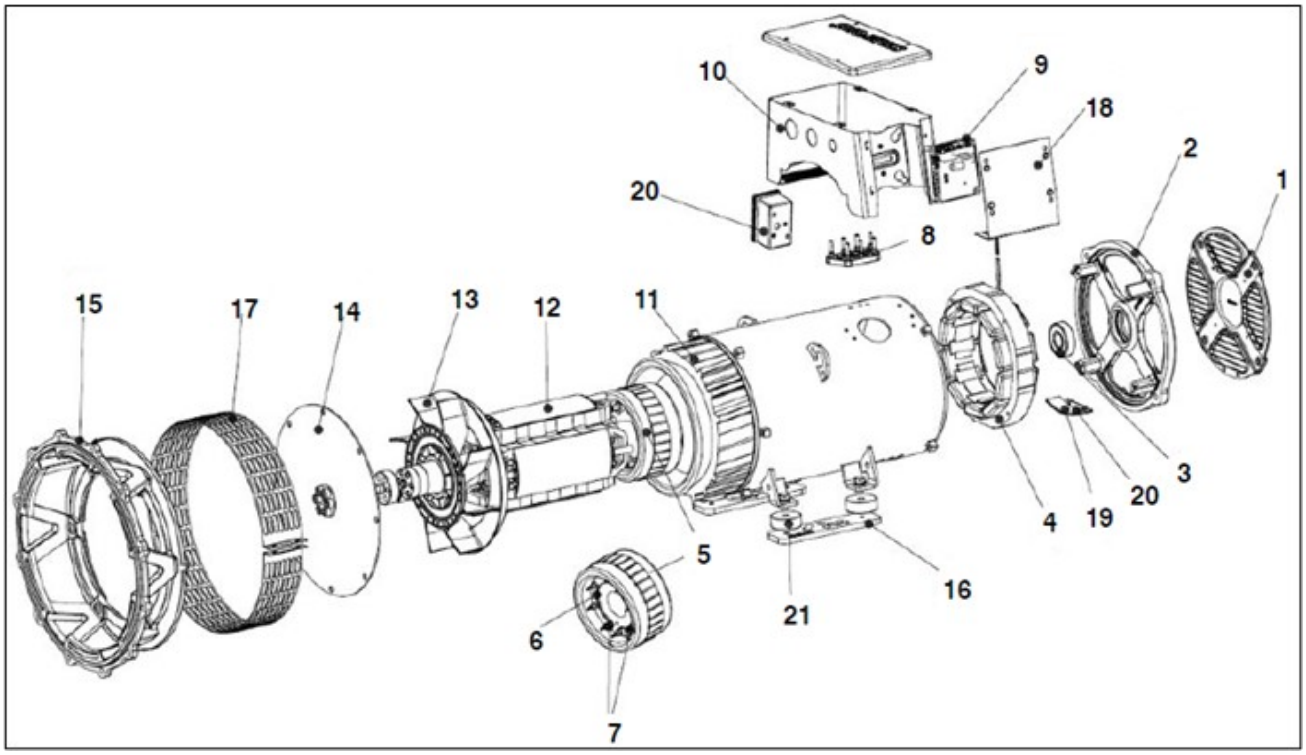

FIGURE 6. S0L1 - ONE BEARING ALTERNATOR PARTS DRAWING

TABLE 7. S0L1 - ONE BEARING ALTERNATOR PARTS LIST

Item	Part No.	Description	Qty.	Recommended Service Part	RSL Class	RSL Type
1	A052E628	Cover, End	1	-	-	-
2	A051P115	Bracket, End, F0, NDE	1	-	-	-
3	A054H811	Kit, Bearing, F1, NDE, S0L2, 1 Bearing	1	Yes	B	M
4	A052J112	Exciter Stator 30 mm (D,H,J)	1	Yes	A	SC
4	A052J113	Exciter Stator 35 mm (L,P,S)	1	Yes	A	SC
5	A052J677	Exciter Stator 30 mm (D,H,J)	1	Yes	A	SC
5	A052J678	Exciter Rotor 35 mm (L,P,S)	1	Yes	A	SC
6	A051C308	Rectifier, Rotor, F0	1	Yes	A	SC
7	A054H820	Kit, Diode Repair, F1	1	Yes	A	SC
8	A054H831	Terminal Board Kit (1 And 3 Phase)	1	-	-	-
9	A059F437	AVR AS540 Kit	1	Yes	A	SC
9	A075Z492	AVR VITA01 Kit	1	Yes	A	SC
10	A052X170	Terminal Enclosure, F0, IP23	1	-	-	-

 Copyright © 2025 Cummins Inc.

Item	Part No.	Description	Qty.	Recommended Service Part	RSL Class	RSL Type
11	QMSN	Wound Main Stator With Frame Assembly	1	-	-	-
12	QMSN	Wound Main Rotor With Complete Assembly	1	-	-	-
13	A052F581	Fan, F0, 1, CTRF250	1	-	-	-
14	A052W626	Coupling Kit, F0, SAE 10, 1 Bearing	1	-	-	-
14	A052W676	Coupling Kit, F0, SAE 11.5, 1 Bearing	1	-	-	-
14	A052W678	Coupling Kit, F0, SAE 7.5, 1 Bearing	1	-	-	-
14	A053E721	Coupling Kit, F0, SAE 6.5, 1 Bearing	1	-	-	-
15	A052V920	Adaptor Kit, F0, SAE 4, 1 Bearing	1	-	-	-
15	A053E622	Adaptor Kit, F0, SAE 3, 1 Bearing	1	-	-	-
15	A053E624	Adaptor Kit, F0, SAE 5, 1 Bearing	1	-	-	-
16	A052X624	Generator Base Plate (Foot Plates Only) Kit	1	-	-	-
17	A054L239	DE Screen SAE 3	1	-	-	-
17	A054L242	DE Screen SAE 4	1	-	-	-
17	A054L246	DE Screen SAE 5	1	-	-	-
18	A052F476	Panel, Terminal Encl, F0, SD, IP23	1	-	-	-
18	A075H396	Panel, Terminal Encl, F0, SD, IP23 for VITA01	1	-	-	-
19	A053L646	Heater Cartridge 25.0 W, 12 VAC, 0 VDC	1	-	-	-
19	A053L668	Heater Cartridge 25.0 W, 12 AC, 0 VDC	1	-	-	-
19	A053P092	Heater Cartridge 25.0 W, 115 VAC, 0 VDC	1	-	-	-
19	A053P101	Heater Cartridge 25.0 , 230 VAC, 0 VDC	1	-	-	-
20	A054K278	Kit, Heater F0, 12 V	1	-	-	-
20	A054K280	Kit, Heater F0, 24 V	1	-	-	-
20	A054K282	Kit, Heater F0, 115 V	1	-	-	-
20	A054K284	Kit, Heater F0, 230 V	1	-	-	-
21	A051L180	28 mm Height Spacer Block	4	-	-	-

Copyright © 2025 Cummins Inc.

Item	Part No.	Description	Qty.	Recommended Service Part	RSL Class	RSL Type
Not Shown	45-0280	Anti Fretting Paste	1	Yes	-	-
-	**NOTES:**	-	-	-	-	-
-	4*	Exciter Stator 30 mm (D,H,J)	-	-	-	-
-	4#	Exciter Stator 35 mm (L,P,S)	-	-	-	-
-	5*	Exciter Stator 30 mm (D,H,J)	-	-	-	-
-	5#	Exciter Rotor 35 mm (L,P,S)	-	-	-	-
-	8*	Terminal Board Kit (1 and 3 Phase)	-	-	-	-
-	16*	Generator Base Plate (Foot Plates Only) Kit	-	-	-	-
-	17*	DE Screen SAE 3	-	-	-	-
-	17#	DE Screen SAE 4	-	-	-	-
-	17**	DE Screen SAE 5	-	-	-	-
-	21*	28 mm Height Spacer Block	-	-	-	-

 Copyright © 2025 Cummins Inc.

This page is intentionally blank.

8 S0L2 - One Bearing Alternator

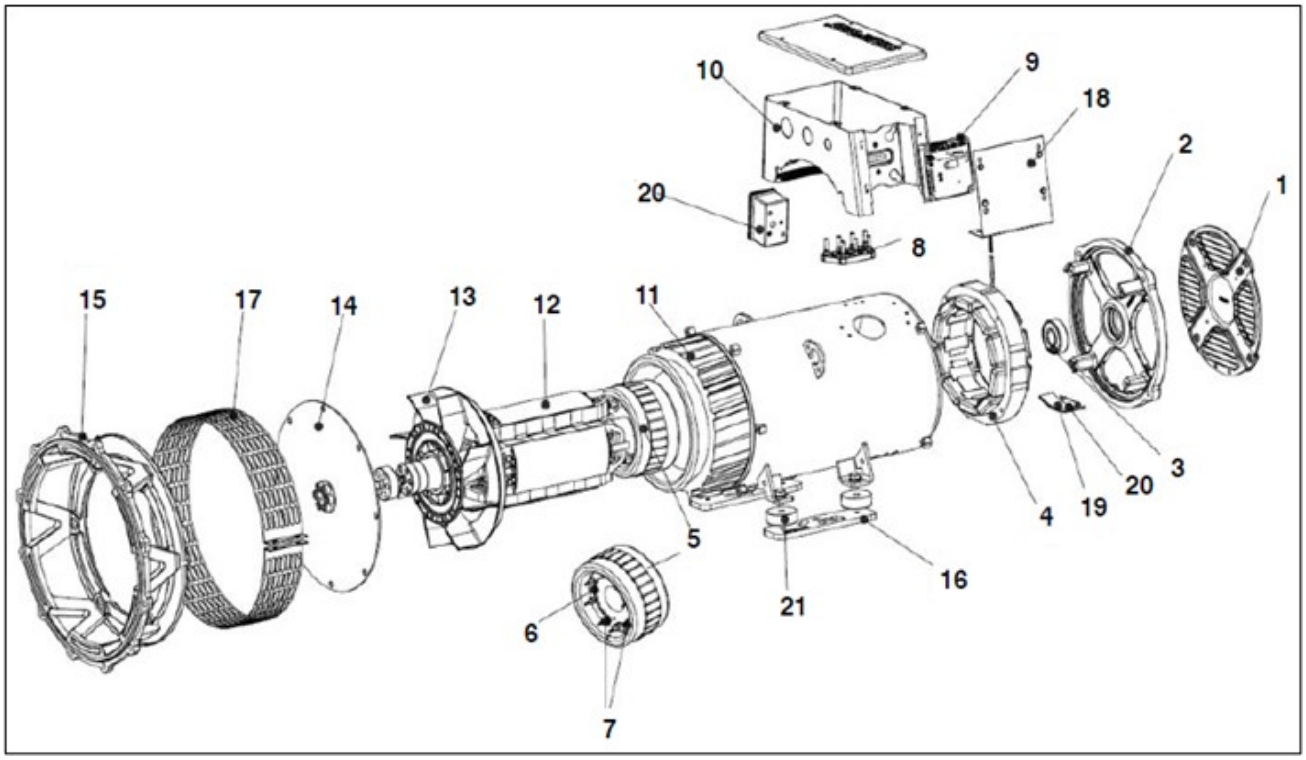

FIGURE 7. S0L2 - ONE BEARING ALTERNATOR PARTS DRAWING

TABLE 8. S0L2 - ONE BEARING ALTERNATOR PARTS LIST

Item	Part No.	Description	Qty.	Recommended Service Part	RSL Class	RSL Type
1	A052E626	Cover, End	1	-	-	-
2	A051P111	Bracket, End, F1, NDE	1	-	-	-
3	A054H811	Kit, Bearing, F1, NDE, S0L2, 1 Bearing	1	Yes	B	M
4	A051G465	Exciter Stator 25 mm (F,G,K)	1	Yes	A	SC
4	A051G467	Exciter Stator 30 mm (M)	1	Yes	A	SC
4	A051L225	Exciter Stator 34 mm (P,U)	1	Yes	A	SC
5	190-1041	Exciter Rotor 25 mm (F,G,K)	1	Yes	A	SC
5	191-1063	Exciter Rotor 34 mm (P,U)	1	Yes	A	SC
5	191-1072	Exciter Rotor 30 mm (M)	1	Yes	A	SC
6	A054H816	Kit, Rotator Rectifier, F1	1	Yes	A	SC
7	A054H820	Kit, Diode Repair, F1	1	Yes	A	SC
8	A054H831	Terminal Board Kit (1 And 3 Phase)	1	-	-	-
9	A059F437	AVR AS540 Kit	1	Yes	A	SC
9	A075Z492	AVR VITA01 Kit	1	Yes	A	SC

 Copyright © 2025 Cummins Inc.

Item	Part No.	Description	Qty.	Recommended Service Part	RSL Class	RSL Type
10	A052X183	Terminal Enclosure F1, IP123	1	-	-	-
11	QMSN	Wound Main Stator With Frame Assembly	1	-	-	-
12	QMSN	Wound Main Rotor With Complete Assembly	1	-	-	-
13	A052F473	Fan, F1, 1, Ctrf295	1	-	-	-
14	A052W607	Coupling Kit SAE 11.5 (3 mm x 1) (C-D)	1	-	-	-
14	A052W684	Coupling Kit, F1, SAE 10, 1 Bearing	1	-	-	-
14	A053F395	Coupling Kit, F1, SAE 7.5, 1 Bearing	1	-	-	-
14	A053F397	Coupling Kit, F1, SAE 6.5, 1 Bearing	1	-	-	-
14	A054G545	Coupling Kit SAE 11.5 (1.2 mm x 4) (C-D)	1	-	-	-
15	A052V905	Adaptor Kit, F1, SAE 3, 1 Bearing	1	-	-	-
15	A053F381	Adaptor Kit, F1, SAE 4, 1 Bearing	1	-	-	-
15	A053F383	Adaptor Kit, F1, SAE 5, 1 Bearing	1	-	-	-
16	A052X629	Generator Base Plate (Foot Plates Only) Kit	1	-	-	-
17	A054H863	DE Screen SAE 3	1	-	-	-
17	A054H889	DE Screen SAE 4	1	-	-	-
17	A054H900	DE Screen SAE 5	1	-	-	-
18	A052H908	Panel, Terminal Enclosure F1, SD, IP23	1	-	-	-
18	A075H401	Panel, Terminal Encl, F0, SD, IP23 for VITA01	1	-	-	-
19	A053L670	Heater, Cartridge 45.0 W, 12 VAC 0 VDC	1	-	-	-
19	A053L675	Heater, Cartridge 45.0 W, 24 VAC 0 VDC	1	-	-	-
19	A053L677	Heater, Cartridge 45.0 W, 115 VAC 0 VDC	1	-	-	-
19	A053L678	Heater, Cartridge 45.0 W, 230 VAC 0 VDC	1	-	-	-
20	A054K286	Kit, Heater, F1, 12 V	1	-	-	-
20	A054K288	Kit, Heater, F1, 24 V	1	-	-	-
20	A054K290	Kit, Heater, F1, 115 V	1	-	-	-

Item	Part No.	Description	Qty.	Recommended Service Part	RSL Class	RSL Type
20	A054K292	Kit, Heater, F1, 230 V	1	-	-	-
21	A051L176	20 mm Height Spacer Block	4	-	-	-
Not Shown	45-0280	Anti Fretting Paste	1	Yes	-	-
-	**NOTES:**	-	-	-	-	-
-	4*	Exciter Stator 25 mm (F,G,K)	-	-	-	-
-	4#	Exciter Stator 30 mm (M)	-	-	-	-
-	4**	Exciter Stator 34 mm (P,U)	-	-	-	-
-	5*	Exciter Rotor 25 mm (F,G,K)	-	-	-	-
-	5#	Exciter Rotor 30 mm (M)	-	-	-	-
-	5**	Exciter Rotor 34 mm (P,U)	-	-	-	-
-	8*	Terminal Board Kit (1 and 3 Phase)	-	-	-	-
-	14*	Coupling Kit SAE 11.5 (3 mm x 1 CD)	-	-	-	-
-	14#	Coupling Kit SAE 11.5 (1.2 mm x 4 CD)	-	-	-	-
-	16*	Generator Base Plate (Foot Plates Only) Kit	-	-	-	-
-	17*	DE Screen SAE 3	-	-	-	-
-	17#	DE Screen SAE 4	-	-	-	-
-	17**	DE Screen SAE 5	-	-	-	-
-	21*	20 mm Height Spacer Block	-	-	-	-

 Copyright © 2025 Cummins Inc.

This page is intentionally blank.

9 S1L2 - One Bearing Alternator

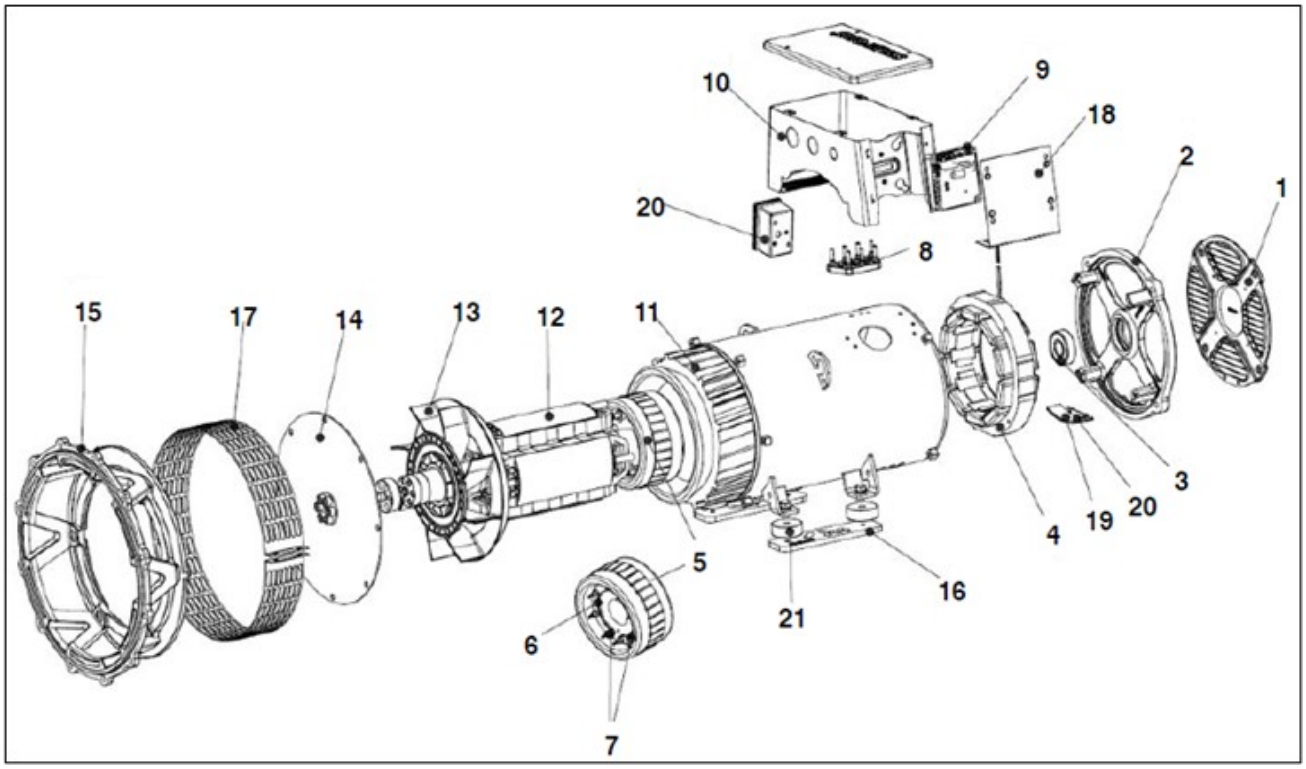

FIGURE 8. S1L2 - ONE BEARING ALTERNATOR PARTS DRAWING

TABLE 9. S1L2 - ONE BEARING ALTERNATOR PARTS LIST

Item	Part No.	Description	Qty.	Recommended Service Part	RSL Class	RSL Type
1	A052E494	Cover, End	1	-	-	-
2	A051P107	Bracket, End, F1, NDE	1	-	-	-
3	45-0866	Bearing Kit	1	Yes	B	M
4	A051L226	Exciter Stator 38 mm (J,K,G,H)	1	Yes	A	SC
4	A051L227	Exciter Stator 45 mm (N,R)	1	Yes	A	SC
4	A053F533	Exciter Stator 55 mm (Y)	1	Yes	A	SC
5	191-1064	Exciter Rotor 38 mm (J,K,G,L)	1	Yes	A	SC
5	A051L228	Exciter Rotor 45 mm (N,R)	1	Yes	A	SC
5	A053F505	Exciter Rotor 55 mm (Y)	1	Yes	A	SC
6	45-0427	Rotating Rectifier Assembly	1	Yes	A	SC
7	RSK-1101	Diode Forward/Reverse And Varistor Kit	1	Yes	A	SC
8	A054X535	Terminal Board Kit (1 And 3 Phase)	1	-	-	-
9	A059F437	AVR AS540 Kit	1	Yes	A	SC

 Copyright © 2025 Cummins Inc.

Item	Part No.	Description	Qty.	Recommended Service Part	RSL Class	RSL Type
9	A075Z492	AVR VITA01 Kit	1	Yes	A	SC
10	A052X197	Terminal Enclosure F1, IP23	1	-	-	-
11	QMSN	Wound Main Stator With Frame Assembly	1	-	-	-
12	QMSN	Wound Main Rotor With Complete Assembly	1	-	-	-
13	A057R342	Fan, F0, 1, Ctrf350	1	-	-	-
14	A052W630	Coupling Kit SAE 11.5 (1.2 mm x 4) (C-D)	1	-	-	-
14	A052W687	Coupling Kit SAE 10 (1.2 mm x 4) (C-D)	1	-	-	-
14	A053G582	Coupling Kit SAE 11.5 (1.5 mm x 3) (C-D)	1	-	-	-
14	A053G584	Coupling Kit SAE 10 (1.5 mm x 3) (C-D)	1	-	-	-
14	A056L900	Coupling Kit SAE 10 (1.2 mm x 4) (C-D)	1	-	-	-
14	A056L902	Coupling Kit SAE 10 (1.5 mm x 3) (C-D)	1	-	-	-
14	A059B967	Coupling Kit, F1, SAE 7.5, 1 Bearing (1.2x4)	1	-	-	-
15	A052T358	Adaptor Kit, F1, SAE 3, 1 Bearing	1	-	-	-
15	A053F333	Adaptor Kit, F1, SAE 4, 1 Bearing	1	-	-	-
16	A052X631	Generator Base Plate (Foot Plates Only) Kit	1	-	-	-
17	A054X974	DE Screen SAE 3, SAE 4	1	-	-	-
18	A052J157	Panel, Terminal Enclosure F1, SD, IP23	1	-	-	-
18	A075H402	Panel, Terminal Encl, F1, SD, IP23 for VITA01	1	-	-	-
19	A056F851	Heater, Cartridge 80.0w, 12 VAC 0 VDC	1	-	-	-
19	A056F858	Heater, Cartridge 80.0 W, 24 VAC 0 VDC	1	-	-	-
19	A056F859	Heater, Cartridge 80.0w, 115 VAC 0 VDC	1	-	-	-
19	A056F860	Heater, Cartridge 80.0w, 230 VAC 0 VDC	1	-	-	-
20	A054K294	Kit, Heater, F1, 12 V	1	-	-	-
20	A054K297	Kit, Heater, F1, 24 V	1	-	-	-
20	A054K299	Kit, Heater, F1, 115 V	1	-	-	-

Item	Part No.	Description	Qty.	Recommended Service Part	RSL Class	RSL Type
20	A054K301	Kit, Heater, F1, 230 V	1	-	-	-
21	A051L176	20 mm Height Spacer Block	4	-	-	-
21	A051L177	45 mm Height Spacer Block	4	-	-	-
Not Shown	45-0280	Anti Fretting Paste	1	Yes	-	-
-	**NOTES:**	-	-	-	-	
-	4*	Exciter Stator 38 mm (J,K,G,H)	-	-	-	-
-	4#	Exciter Stator 45 mm (N,R)	-	-	-	-
-	4**	Exciter Stator 55 mm (Y)	-	-	-	-
-	5*	Exciter Rotor 38 mm (J,K,G,L)	-	-	-	-
-	5#	Exciter Rotor 45 mm (N,R)	-	-	-	-
-	5**	Exciter Rotor 55 mm (Y)	-	-	-	-
-	8*	Terminal Board Kit (1 and 3 Phase)	-	-	-	-
-	14*	Coupling Kit SAE 10 (1.2 mm x 4 CD)	-	-	-	-
-	14**	Coupling Kit SAE 10 (1.5 mm x 3 CD)	-	-	-	-
-	14***	Coupling Kit SAE 10 (1.2 mm x 4 CD)	-	-	-	-
-	14****	Coupling Kit SAE 10 (1.5 mm x 3 CD)	-	-	-	-
-	14#	Coupling Kit SAE 11.5 (1.2 mm x 4 CD)	-	-	-	-
-	14##	Coupling Kit SAE 11.5 (1.5 mm x 3 CD)	-	-	-	-
-	16*	Generator Base Plate (Foot Plates Only) Kit	-	-	-	-
-	17*	DE Screen SAE 3, SAE 4	-	-	-	-
-	21*	45 mm Height Spacer Block	-	-	-	-
-	21**	20 mm Height Spacer Block	-	-	-	-

 Copyright © 2025 Cummins Inc.

This page is intentionally blank.

10 UCD22 - One Bearing Alternator

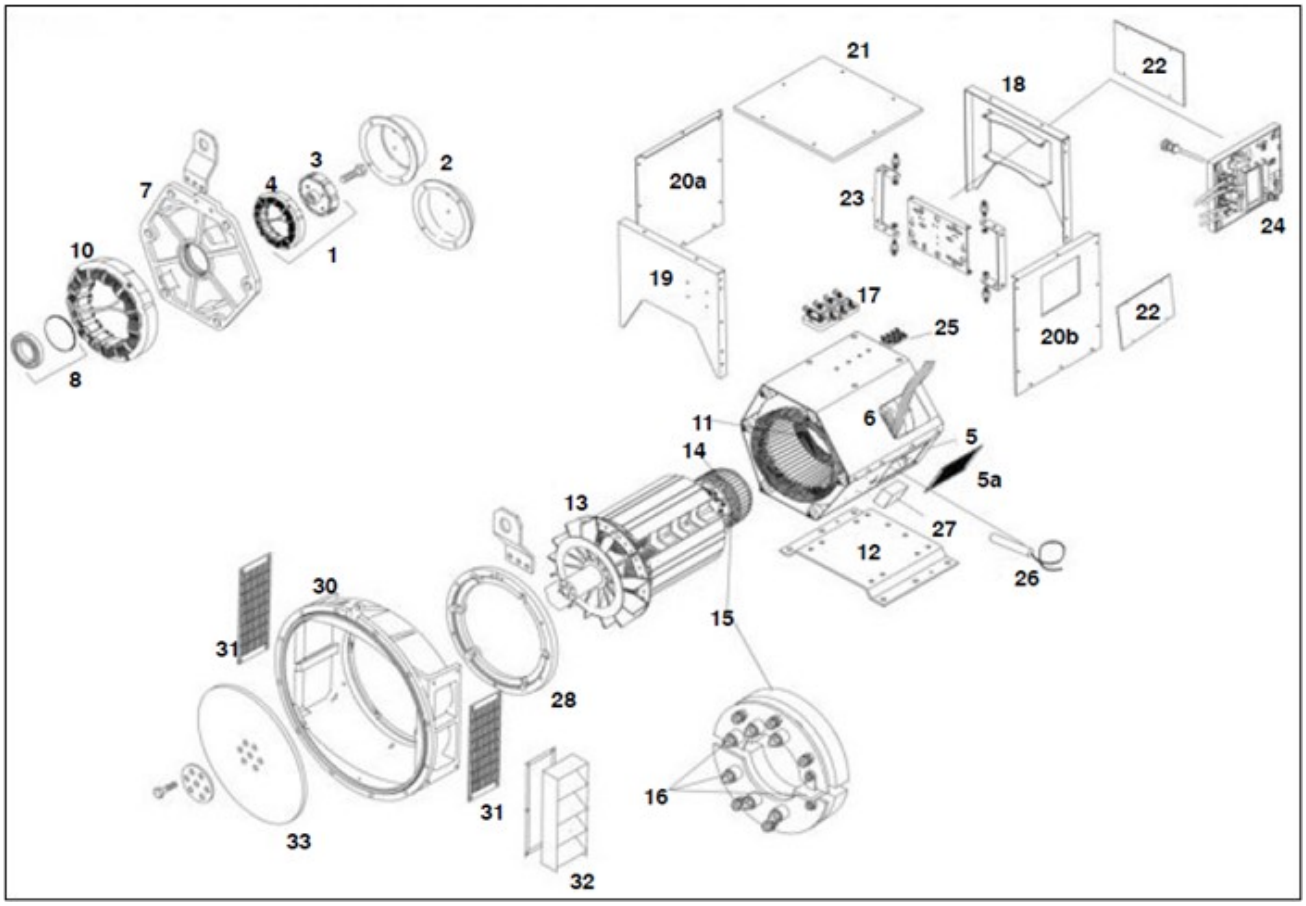

FIGURE 9. UCD22 - ONE BEARING ALTERNATOR PARTS DRAWING

TABLE 10. UCD22 - ONE BEARING ALTERNATOR PARTS LIST

Item	Part No.	Description	Qty.	Recommended Service Part	RSL Class	RSL Type
1	45-0075A	Complete PMG Upfit Kit	1	-	-	-
2	450-14360	PMG Cover (Cover Included In Above Kit)	1	-	-	-
2	450-14450	Non PMG Cover	1	-	-	-
3	45-1080	Current PMG Rotor/Stator Repair Kit	1	Yes	A	SC
4	45-1080	Current PMG Rotor/Stator Repair Kit	1	Yes	A	SC
5	230-10340	Main Stator Bottom Cover (C-D) (To 6/12/12)	1	-	-	-
5	230-10341	Main Stator Bottom Cover (E-F) (To 6/12/12)	1	-	-	-
5	230-10342	Main Stator Bottom Cover (G) (To 6/12/12)	1	-	-	-
5a	230-10054	Air Inlet Cover	2	-	-	-

 Copyright © 2025 Cummins Inc.

Item	Part No.	Description	Qty.	Recommended Service Part	RSL Class	RSL Type
6	230-10336	Main Stator Top Cover (C-D) (To 6/12/12)	1	-	-	-
6	230-10337	Main Stator Top Cover (E-F) (To 6/12/12)	1	-	-	-
6	230-10338	Main Stator Top Cover (G) (To 6/12/12)	1	-	-	-
7	230-10002	NDE Bracket	1	-	-	-
8	45-0867	NDE Bearing Kit	1	Yes	A	M
10	230-1495	Exciter Stator 30 mm (C-D)	1	Yes	A	SC
10	230-1497	Exciter Stator 40 mm (E-G)	1	Yes	A	SC
10	A052B581	Exciter Stator 30 mm Severe Environmental (C-D)	1	Yes	A	SC
10	A052B588	Exciter Stator 40 mm Severe Environmental (E-G)	1	Yes	A	SC
11	QMSN	Main Stator Bar Assembly	1	-	-	-
12	230-10270	Foot (To 6/12/12)	1	-	-	-
13	QMSN	Main Rotor Assembly	1	-	-	-
14	210-1036	Exciter Rotor 30 mm (C-D)	1	Yes	A	SC
14	210-1037	Exciter Rotor 40 mm (E-G)	1	Yes	A	SC
15	45-0428	Rotating Rectifier Assembly	1	Yes	A	SC
16	RSK-2001	Diode Forward/Reverse And Varistor Kit	1	Yes	A	SC
17	230-10624	Main Terminal Board 7 Pin	1	-	-	-
17	450-15617	Main Terminal Board 8 Pin	1	-	-	-
18	230-10566	Terminal Box End Panel NDE (Aperture)	1	-	-	-
18	230-10587	Terminal Box End Panel NDE (Plain)	1	-	-	-
19	230-10565	Terminal Box End Panel DE (Plain)	1	-	-	-
19	230-10599	Terminal Box End Panel DE (Aperture)	1	-	-	-
20a	230-10567	Terminal Box Side Panel (Left Hand) (Plain)	1	-	-	-
20a	230-10573	Terminal Box Side Panel (Left Hand) (Aperture)	1	-	-	-
20a	230-10578	Terminal Box Side Panel (Left Hand) (Plain) (Air Filter)	1	-	-	-
20b	230-10568	Terminal Box Side Panel (Right Hand) (Aperture)	1	-	-	-

Item	Part No.	Description	Qty.	Recommended Service Part	RSL Class	RSL Type
20b	230-10569	Terminal Box Side Panel (Right Hand) (Plain) (Air Filter)	1	-	-	-
20b	230-10575	Terminal Box Side Panel (Right Hand) (Plain)	1	-	-	-
21	230-10069	Terminal Box Lid	1	-	-	-
24	E000-23412/1P	AVR MX341	1	Yes	A	SC
24	E000-24210/1P	AVR SX421	1	Yes	A	SC
24	E000-24403/1P	AVR AS440	1	Yes	A	SC
24	E000-24403/1P	AVR AS440	1	Yes	A	SC
24	E000-24408/1P	AVR AS440 UL Approved	1	Yes	A	SC
24	E000-24408/1P	AVR AS440 UL Approved	1	Yes	A	SC
25	450-15489	Auxiliary Terminal Board	2	-	-	-
26	A053N107	Heater 110-125 V UL Cert	1	-	-	-
26	A053N108	Heater 220-260 V UL Cert	1	-	-	-
26	A053X265	Heater Kit 110-125 V To Include Term Box For Retro UL Cert	1	-	-	-
26	A053X267	Heater Kit 220-260 V To Include Term Box For Retro UL Cert	1	-	-	-
27	45-0024	Terminal Box For Heaters	1	-	-	-
28	230-10272	DE Adaptor Ring	1	-	-	-
30	45-0850	Adaptor Kit SAE 3	1	-	-	-
31	230-10457	DE Screen	2	-	-	-
32	45-0807	Louvre Kit	1	-	-	-
33	45-0839	Coupling Kit SAE 10	1	-	-	-
33	45-0840	Coupling Kit SAE 11.5	1	-	-	-
NOTE: If the first position of the alternator serial number is M, the replacements for the rotor and stator are no longer available. Please contact the factory Technical Support for more information.						

 Copyright © 2025 Cummins Inc.

This page is intentionally blank.

11 UCD27 - One Bearing Alternator

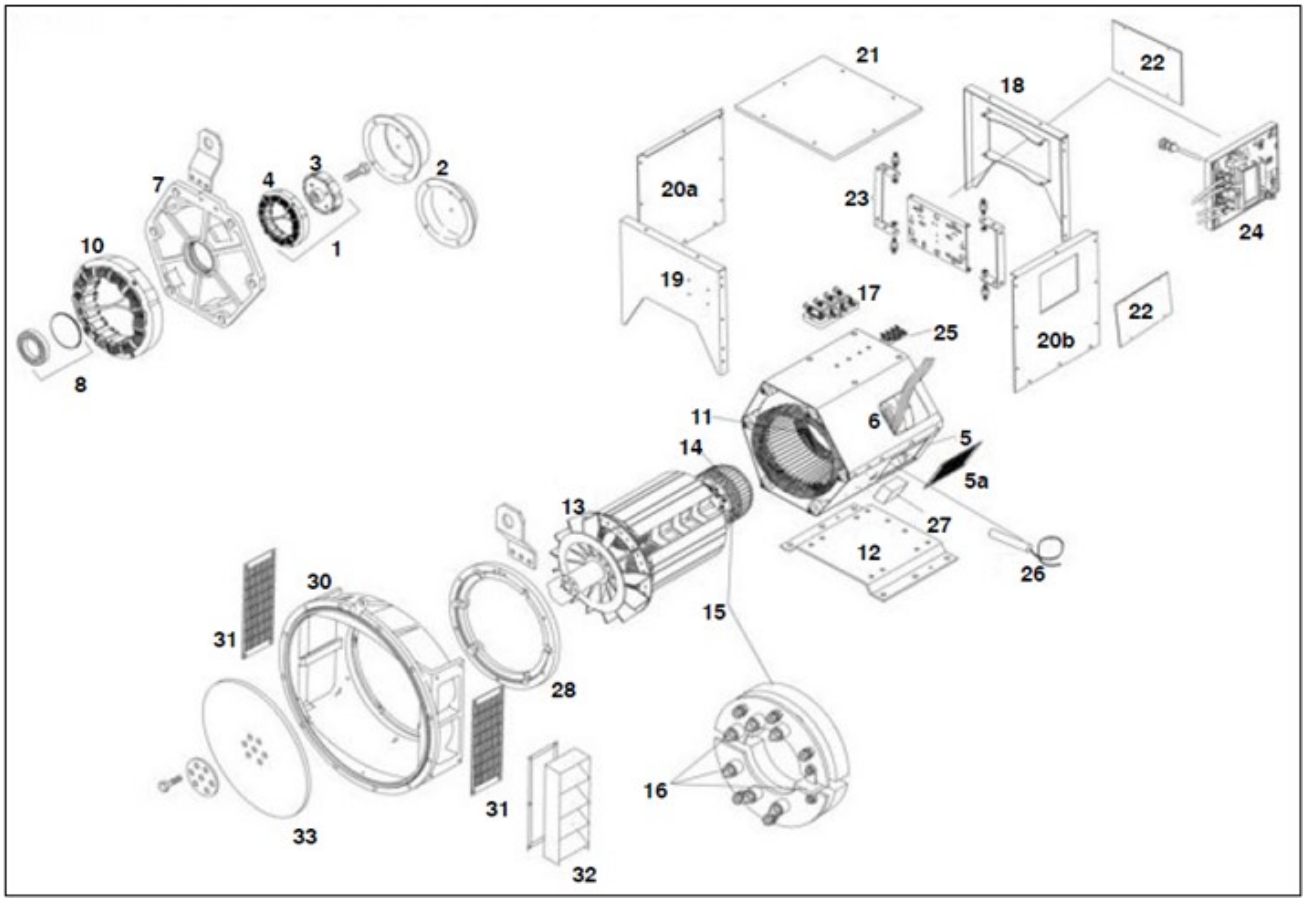

FIGURE 10. UCD27 - ONE BEARING ALTERNATOR PARTS DRAWING

TABLE 11. UCD27 - ONE BEARING ALTERNATOR PARTS LIST

Item	Part No.	Description	Qty.	Recommended Service Part	RSL Class	RSL Type
1	45-0075A	Complete PMG Upfit Kit	1	-	-	-
2	450-14360	PMG Cover (Cover Included In Above Kit)	1	-	-	-
2	450-14450	Non PMG Cover	1	-	-	-
3	45-1080	Current PMG Rotor/Stator Repair Kit	1	Yes	A	SC
4	45-1080	Current PMG Rotor/Stator Repair Kit	1	Yes	A	SC
5	330-10390	Main Stator Bottom Cover (J-K)	1	-	-	-
5a	330-10020	Air Inlet Cover	2	-	-	-
6	330-10385	Main Stator Top Cover (J-K)	1	-	-	-
7	330-10002	NDE Bracket	1	-	-	-

 Copyright © 2025 Cummins Inc.

Item	Part No.	Description	Qty.	Recommended Service Part	RSL Class	RSL Type
7	330-10258	NDE Bracket (For Use With Bearing RTD)	1	-	-	-
8	45-0868	NDE Bearing Kit	1	-	-	-
10	330-1280	Exciter Stator 60 mm (J-K)	1	Yes	A	SC
10	A052B648	Exciter Stator 60 mm Severe Environmental (J-K)	1	Yes	A	SC
11	QMSN	Main Stator Bar Assy	1	-	-	-
12	330-10137	Foot	1	-	-	-
13	QMSN	Main Rotor Assy	1	-	-	-
14	310-1028	Exciter Rotor 60 mm (J-K)	1	Yes	A	SC
15	45-0428	Rotating Rectifier Assembly	1	Yes	A	SC
16	RSK-2001	Diode Forward/Reverse And Varistor Kit	1	Yes	A	SC
17	230-10624	Main Terminal Board 7 Pin	1	-	-	-
17	450-15617	Main Terminal Board 8 Pin	1	-	-	-
18	330-10602	Terminal Box End Panel NDE (Access)	1	-	-	-
18	330-10618	Terminal Box End Panel NDE (Plain) (Low Profile)	1	-	-	-
18	330-10622	Terminal Box End Panel NDE (Plain)	1	-	-	-
19	330-10601	Terminal Box End Panel DE (Plain)	1	-	-	-
19	330-10630	Terminal Box End Panel DE (Access)	1	-	-	-
19	330-10634	Terminal Box End Panel DE (Plain) (Low Profile)	1	-	-	-
19	A041H036	Terminal Box End Panel DE (Aperture) (Low Profile)	1	-	-	-
20a	330-10600	Terminal Box Side Panel (Left Hand) (Low Profile)	1	-	-	-
20a	330-10603	Terminal Box Side Panel (Left Hand) (Plain) And ENC500	1	-	-	-
20a	330-10605	Terminal Box Side Panel (Left Hand) (Air Filter) And ENC500	1	-	-	-
20a	330-10611	Terminal Box Side Panel (Vent) (Gland-Plate) (Left Hand) And ENC500 (J-K)	1	-	-	-
20a	330-10613	Terminal Box Side Panel (Vent) (Plain) (Left Hand) And ENC500 (J-K)	1	-	-	-

Item	Part No.	Description	Qty.	Recommended Service Part	RSL Class	RSL Type
20a	330-10617	Terminal Box Side Panel (Left Hand) (Access) And ENC500	1	-	-	-
20a	330-10620	Terminal Box Side Panel (Vent) (Aperture) (Left Hand) And ENC500 (J-K)	1	-	-	-
20b	330-10606	Terminal Box Side Panel (Right Hand) (Air Filter) (Aperture) And ENC500	1	-	-	-
20b	330-10609	Terminal Box Side Panel (Right Hand) (Plain) And ENC500	1	-	-	-
20b	330-10612	Terminal Box Side Panel (Vent) (Aperture) (Right Hand) And ENC500 (J-K)	1	-	-	-
20b	330-10614	Terminal Box Side Panel (Vent) (Plain) (Right Hand) And ENC500 (J-K)	1	-	-	-
20b	330-10615	Terminal Box Side Panel (Right Hand) (Air Filter) And ENC500	1	-	-	-
20b	330-10636	Terminal Box Side Panel (Right Hand) (Aperture) (Low Profile)	1	-	-	-
21	330-10069	Terminal Box Lid	1	-	-	-
22	410-10536	AVR Cover Plate From (28/11/04)	1	-	-	-
22	450-14310	AVR Cover Plate	1	-	-	-
23	45-0742	AVR Mounting Bracket	1	-	-	-
24	E000-23212/1P	AVR MX321	1	Yes	A	SC
24	E000-23215/1P	AVR MX321 UL	1	Yes	A	SC
24	E000-23408/1P	AVR MX341 UL	1	Yes	A	SC
24	E000-23412/1P	AVR MX341	1	Yes	A	SC
24	E000-24210/1P	AVR SX421	1	Yes	A	SC
24	E000-24403/1P	AVR AS440	1	Yes	A	SC
24	E000-24403/1P	AVR AS440	1	Yes	A	SC
24	E000-24408/1P	AVR AS440 UL Approved	1	Yes	A	SC
24	E000-24408/1P	AVR AS440 UL Approved	1	Yes	A	SC
25	450-15489	Auxiliary Terminal Board	2	-	-	-
26	A053N107	Heater 110-125 V UL Cert	1	-	-	-
26	A053N108	Heater 220-260 V UL Cert	1	-	-	-

 Copyright © 2025 Cummins Inc.

Item	Part No.	Description	Qty.	Recommended Service Part	RSL Class	RSL Type
26	A053X265	Heater Kit 110-125 V To Include Term Box For Retro UL Cert	1	-	-	-
26	A053X267	Heater Kit 220-260 V To Include Term Box For Retro UL Cert	1	-	-	-
27	45-0024	Terminal Box For Heaters	1	-	-	-
30	45-0851	Adaptor Kit SAE 2	1	-	-	-
30	45-0852	Adaptor Kit SAE 1	1	-	-	-
30	A062B089	Adaptor Kit SAE 3	1	-	-	-
31	330-10522	DE Screen	2	-	-	-
32	45-0855	Louvre Kit	1	-	-	-
33	45-0766	Coupling Kit SAE 14	1	-	-	-
33	45-0768	Coupling Kit SAE 11.5	1	-	-	-
33	A062B091	Coupling Kit SAE 11.5 For SAE 3 (1.2 mm)	1	-	-	-
NOTE: If the first position of the alternator serial number is M, the replacements for the rotor and stator are no longer available. Please contact the factory Technical Support for more information.						

12 UCI224 - One Bearing Alternator

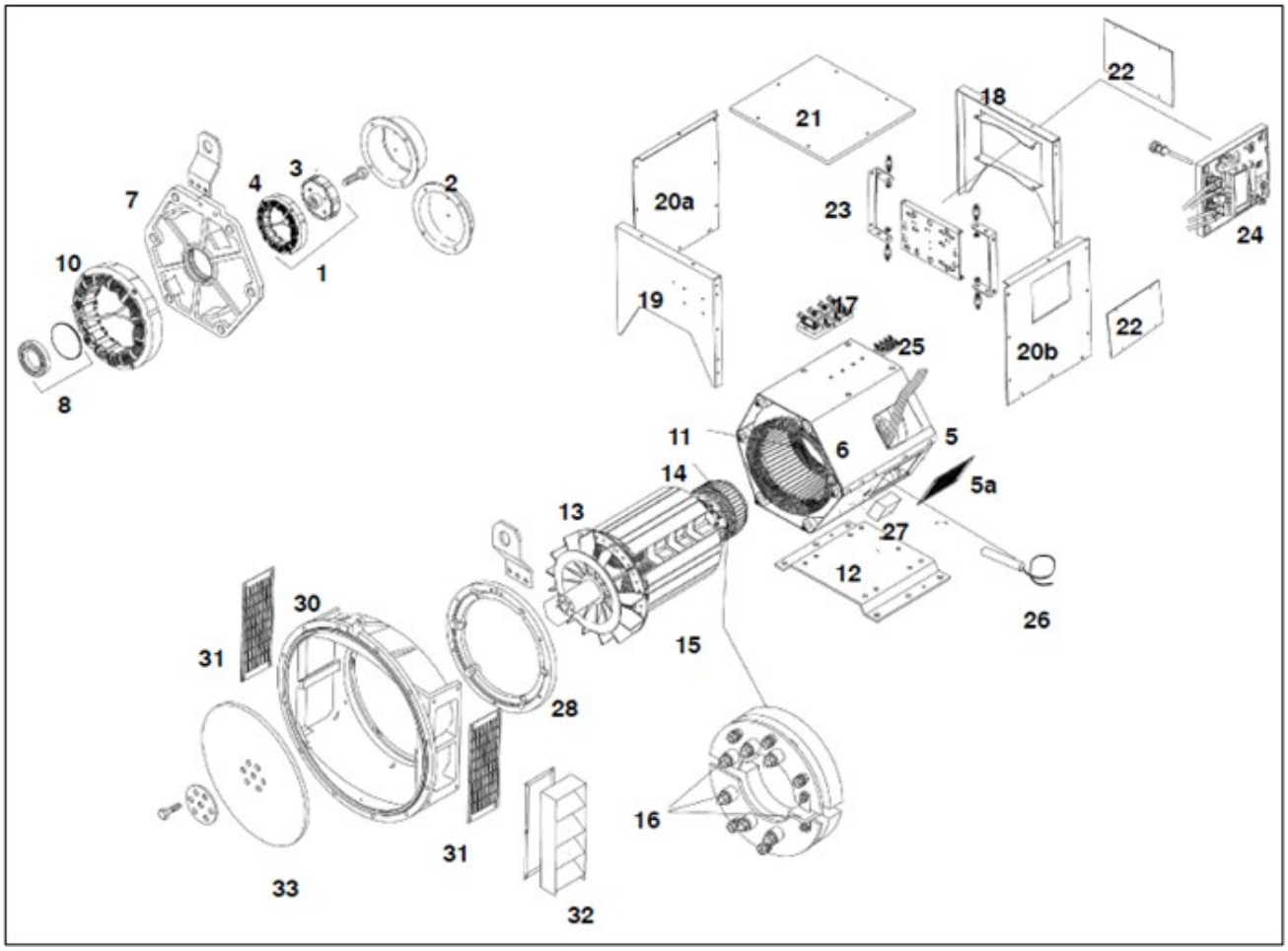

FIGURE 11. UCI224 - ONE BEARING ALTERNATOR PARTS DRAWING

TABLE 12. UCI224 - ONE BEARING ALTERNATOR PARTS

Item	Part No.	Description	Qty.	Recommended Service Part	RSL Class	RSL Type
1	45-0075A	Complete PMG Upfit Kit	1	-	-	-
2	450-14360	PMG Cover (Cover Included In Above Kit)	1	-	-	-
2	450-14450	Non PMG Cover	1	-	-	-
3	45-1080	Current PMG Rotor/Stator Repair Kit	1	Yes	A	SC
4	45-1080	Current PMG Rotor/Stator Repair Kit	1	Yes	A	SC
5	230-10340	Main Stator Bottom Cover (C-D)	1	-	-	-
5	230-10341	Main Stator Bottom Cover (E-F)	1	-	-	-

 Copyright © 2025 Cummins Inc.

Item	Part No.	Description	Qty.	Recommended Service Part	RSL Class	RSL Type
5	230-10342	Main Stator Bottom Cover (G)	1	-	-	-
5A	230-10054	Air Inlet Cover	2	-	-	-
6	230-10336	Main Stator Top Cover (C-D)	1	-	-	-
6	230-10337	Main Stator Top Cover (E-F)	1	-	-	-
6	230-10338	Main Stator Top Cover (G)	1	-	-	-
7	230-10002	NDE Bracket	1	-	-	-
8	45-0867	NDE Bearing Kit	1	Yes	A	M
10	230-1495	Exciter Stator 30 mm (C-D)	1	Yes	A	SC
10	230-1497	Exciter Stator 40 mm (E-G)	1	Yes	A	SC
10	A052B581	Exciter Stator 30 mm Severe Environmental (C-D)	1	Yes	A	SC
10	A052B588	Exciter Stator 40 mm Severe Environmental (E-G)	1	Yes	A	SC
11	QMSN	Main Stator Bar Assy	1	-	-	-
12	230-10270	Foot	1	-	-	-
13	QMSN	Main Rotor Assy	2	-	-	-
14	210-1036	Exciter Rotor 30 mm (C-D)	1	Yes	A	SC
14	210-1037	Exciter Rotor 40 mm (E-G)	1	Yes	A	SC
15	45-0428	Rotating Rectifier Assembly	1	Yes	A	SC
16	RSK-2001	Diode Forward/Reverse And Varistor Kit	1	Yes	A	SC
17	230-10624	Main Terminal Board 7 Pin	1	-	-	-
17	450-15617	Main Terminal Board 8 Pin	1	-	-	-
18	230-10566	Terminal Box End Panel NDE (Access)	1	-	-	-
18	230-10571	Terminal Box End Panel NDE (Plain) Low/Profile	1	-	-	-
18	230-10587	Terminal Box End Panel NDE (Plain)	1	-	-	-
19	230-10565	Terminal Box End Panel DE (Plain)	1	-	-	-
19	230-10599	Terminal Box End Panel DE (Access)	1	-	-	-
19	A041H349	Terminal Box End Panel DE (Plain) Low/Profile	1	-	-	-
20A	230-10567	Terminal Box Side Panel (Left Hand)	1	-	-	-
20A	230-10573	Terminal Box Side Panel (Access)	1	-	-	-

Item	Part No.	Description	Qty.	Recommended Service Part	RSL Class	RSL Type
20A	230-10574	Terminal Box Side Panel (Left Hand) (Plain) Low Profile	1	-	-	-
20B	230-10568	Terminal Box Side Panel (Access)	1	-	-	-
20B	230-10575	Terminal Box Side Panel (Right Hand)	2	-	-	-
20B	230-10580	Terminal Box Side Panel (RH Series 5 Trans)	1	-	-	-
20B	230-10583	Terminal Box Side Panel RH (Plain) Low Profile	1	-	-	-
20B	230-10627	Terminal Box Side Panel (Access No PFC)	1	-	-	-
21	230-10069	Terminal Box Lid	1	-	-	-
22	410-10536	AVR Cover Plate From (28/11/04)	1	-	-	-
22	450-14310	AVR Cover Plate	1	-	-	-
23	45-0742	AVR Mounting Bracket	1	-	-	-
24	A062Y338	AVR MX322	1	Yes	A	SC
24	E000-23212/1P	AVR MX321	1	Yes	A	SC
24	E000-23215/1P	AVR MX321 UL	1	Yes	A	SC
24	E000-23408/1P	AVR MX341 UL	1	Yes	A	SC
24	E000-23412/1P	AVR MX341	1	Yes	A	SC
24	E000-24210/1P	AVR SX421	1	Yes	A	SC
24	E000-24403/1P	AVR AS440	1	Yes	A	SC
24	E000-24403/1P	AVR AS440	1	Yes	A	SC
24	E000-24408/1P	AVR AS440 UL Approved	1	Yes	A	SC
24	E000-24408/1P	AVR AS440 UL Approved	1	Yes	A	SC
25	450-15489	Auxiliary Terminal Board	2	-	-	-
26	A053N107	Heater 110-125 V UL Cert	1	-	-	-
26	A053N108	Heater 220-260 V UL Cert	1	-	-	-
26	A053X265	Heater Kit 110-125 V To Include Term Box For Retro UL Cert	1	-	-	-
26	A053X267	Heater Kit 220-260 V To Include Term Box For Retro UL Cert	1	-	-	-
27	45-0024	Terminal Box For Heaters	1	-	-	-
28	230-10001	DE Adaptor Ring	1	-	-	-
30	45-0526	DE Adaptor Kit SAE 2	1	-	-	-

 Copyright © 2025 Cummins Inc.

Item	Part No.	Description	Qty.	Recommended Service Part	RSL Class	RSL Type
30	45-0527	DE Adaptor Kit SAE 3	1	-	-	-
30	45-0528	DE Adaptor Kit SAE 4	1	-	-	-
30	45-0689	DE Adaptor Kit SAE 1	1	-	-	-
31	See No. 30	DE Screen (Included In Adaptor Kits)	2	-	-	-
32	45-0630	DE Louvre SAE 1 SAE 3 And SAE 4	1	-	-	-
32	45-0631	DE Louvre SAE 2	1	-	-	-
33	45-0757	Coupling Kit SAE 8	1	-	-	-
33	45-0758	Coupling Kit SAE 10	1	-	-	-
33	45-0759	Coupling Kit SAE 11.5	1	-	-	-
33	45-0760	Coupling Kit SAE 14	1	-	-	-
33	45-0761	Coupling Kit Delco 15.5	1	-	-	-
33	45-0762	Coupling Kit SAE 11.5 (For SAE 1 New)	1	-	-	-

Copyright © 2025 Cummins Inc.

13 UCI224 (C-G) Two Bearing (4 Pole) Alternator

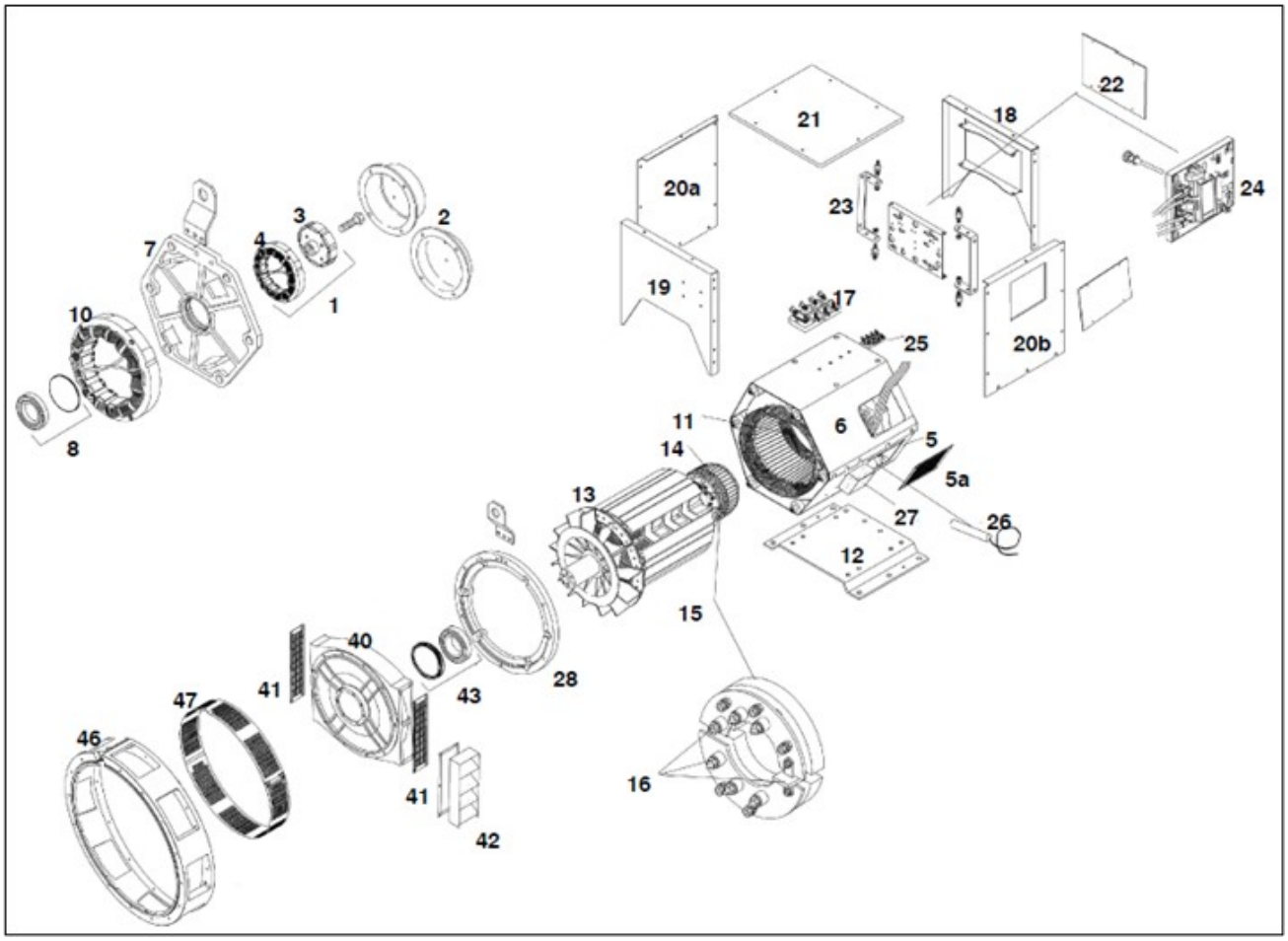

FIGURE 12. UCI224 (C-G) TWO BEARING 4 POLE PARTS DRAWING

TABLE 13. UCI224 (C-G) TWO BEARING 4 POLE PARTS LIST

Item	Part No.	Description	Qty.	Recommended Service Part	RSL Class	RSL Type
1	45-0075A	Complete PMG Upfit Kit	1	-	-	-
2	450-14360	PMG Cover (Cover Included In Above Kit)	1	-	-	-
2	450-14450	Non PMG Cover	1	-	-	-
3	45-1080	Current PMG Rotor/Stator Repair Kit	1	Yes	A	SC
4	45-1080	Current PMG Rotor/Stator Repair Kit	1	Yes	A	SC
5	230-10340	Main Stator Bottom Cover (C-D)	1	-	-	-
5	230-10341	Main Stator Bottom Cover (E-F)	1	-	-	-

 Copyright © 2025 Cummins Inc.

Item	Part No.	Description	Qty.	Recommended Service Part	RSL Class	RSL Type
5	230-10342	Main Stator Bottom Cover (G)	1	-	-	-
5a	230-10054	Air Inlet Cover	2	-	-	-
6	230-10336	Main Stator Top Cover (C-D)	1	-	-	-
6	230-10337	Main Stator Top Cover (E-F)	1	-	-	-
6	230-10338	Main Stator Top Cover (G)	1	-	-	-
7	230-10002	NDE Bracket	1	-	-	-
8	45-0867	NDE Bearing Kit	1	Yes	A	M
10	A052B581	Exciter Stator 30 mm Severe Environmental (C-D)	1	Yes	A	SC
10	A052B588	Exciter Stator 40 mm Severe Environmental (E-G)	1	Yes	A	SC
11	QMSN	Main Stator Bar Assembly	1	-	-	-
12	230-10270	Foot	1	-	-	-
13	QMSN	Main Rotor Assembly	2	-	-	-
14	210-1036	Exciter Rotor 30 mm (C-D)	1	Yes	A	SC
14	210-1037	Exciter Rotor 40 mm (E-G)	1	Yes	A	SC
15	45-0428	Rotating Rectifier Assembly	1	Yes	A	SC
16	RSK-2001	Diode Forward/Reverse And Varistor Kit	1	Yes	A	SC
17	230-10624	Main Terminal Board 7 Pin	1	-	-	-
17	450-15617	Main Terminal Board 8 Pin	1	-	-	-
18	230-10566	Terminal Box End Panel NDE (Access)	1	-	-	-
18	230-10571	Terminal Box End Panel NDE (Plain) Low/Profile	1	-	-	-
18	230-10587	Terminal Box End Panel NDE (Plain)	1	-	-	-
19	230-10565	Terminal Box End Panel DE (Plain)	1	-	-	-
19	230-10599	Terminal Box End Panel DE (Access))	1	-	-	-
19	A041H349	Terminal Box End Panel DE (Plain) Low/Profile	1	-	-	-
20a	230-10567	Terminal Box Side Panel (Left Hand)	1	-	-	-
20a	230-10573	Terminal Box Side Panel (Access)	1	-	-	-
20a	230-10574	Terminal Box Side Panel (Left Hand) (Plain) Low Profile	1	-	-	-

Item	Part No.	Description	Qty.	Recommended Service Part	RSL Class	RSL Type
20b	230-10568	Terminal Box Side Panel (Access)	1	-	-	-
20b	230-10575	Terminal Box Side Panel (Right Hand)	2	-	-	-
20b	230-10580	Terminal Box Side Panel (RH Series 5 Trans)	1	-	-	-
20b	230-10583	Terminal Box Side Panel RH (Plain) Low Profile	1	-	-	-
20b	230-10627	Terminal Box Side Panel (Access No PFC)	1	-	-	-
21	230-10069	Terminal Box Lid	1	-	-	-
22	410-10536	AVR Cover Plate From (28/11/04)	1	-	-	-
22	450-14310	AVR Cover Plate	1	-	-	-
23	45-0742	AVR Mounting Bracket	1	-	-	-
24	A062Y338	AVR MX322	1	Yes	A	SC
24	E000-23212/1P	AVR MX321	1	Yes	A	SC
24	E000-23215/1P	AVR MX321 UL	1	Yes	A	SC
24	E000-23408/1P	AVR MX341 UL	1	Yes	A	SC
24	E000-23412/1P	AVR MX341	1	Yes	A	SC
24	E000-24210/1P	AVR SX421	1	Yes	A	SC
24	E000-24403/1P	AVR AS440	1	Yes	A	SC
24	E000-24403/1P	AVR AS440	1	Yes	A	SC
24	E000-24408/1P	AVR AS440 UL Approved	1	Yes	A	SC
24	E000-24408/1P	AVR AS440 UL Approved	1	Yes	A	SC
25	450-15489	Auxiliary Terminal Board	2	-	-	-
26	A053N107	Heater 110-125 V UL Cert	1	-	-	-
26	A053N108	Heater 220-260 V UL Cert	1	-	-	-
26	A053X265	Heater Kit 110-125 V To Include Term Box For Retro UL Cert	1	-	-	-
26	A053X267	Heater Kit 220-260 V To Include Term Box For Retro UL Cert	1	-	-	-
27	45-0024	Terminal Box For Heaters	1	-	-	-
28	230-10001	DE Adaptor Ring	1	-	-	-
40	230-10073	DE Bracket	1	-	-	-
41	210-10121	DE Screen	1	-	-	-
42	45-0632	Louvre	1	-	-	-
43	45-0365	DE Bearing Kit	1	Yes	A	M

 Copyright © 2025 Cummins Inc.

Item	Part No.	Description	Qty.	Recommended Service Part	RSL Class	RSL Type
46	45-0529	Adaptor Kit SAE 1	2	-	-	-
46	45-0530	Adaptor Kit SAE 2	1	-	-	-
46	45-0531	Adaptor Kit SAE 3	1	-	-	-
46	45-0532	Adaptor Kit SAE 4	1	-	-	-
46	45-0533	Adaptor Kit SAE 5	1	-	-	-
46	45-0604	Adaptor Kit SAE 2 (DIN)	1	-	-	-
47	SEE NO.46	Adaptor Cover (Included In Adaptor Kits)	1	-	-	-

Copyright © 2025 Cummins Inc.

14 UCI274 (C-H) One Bearing Alternator

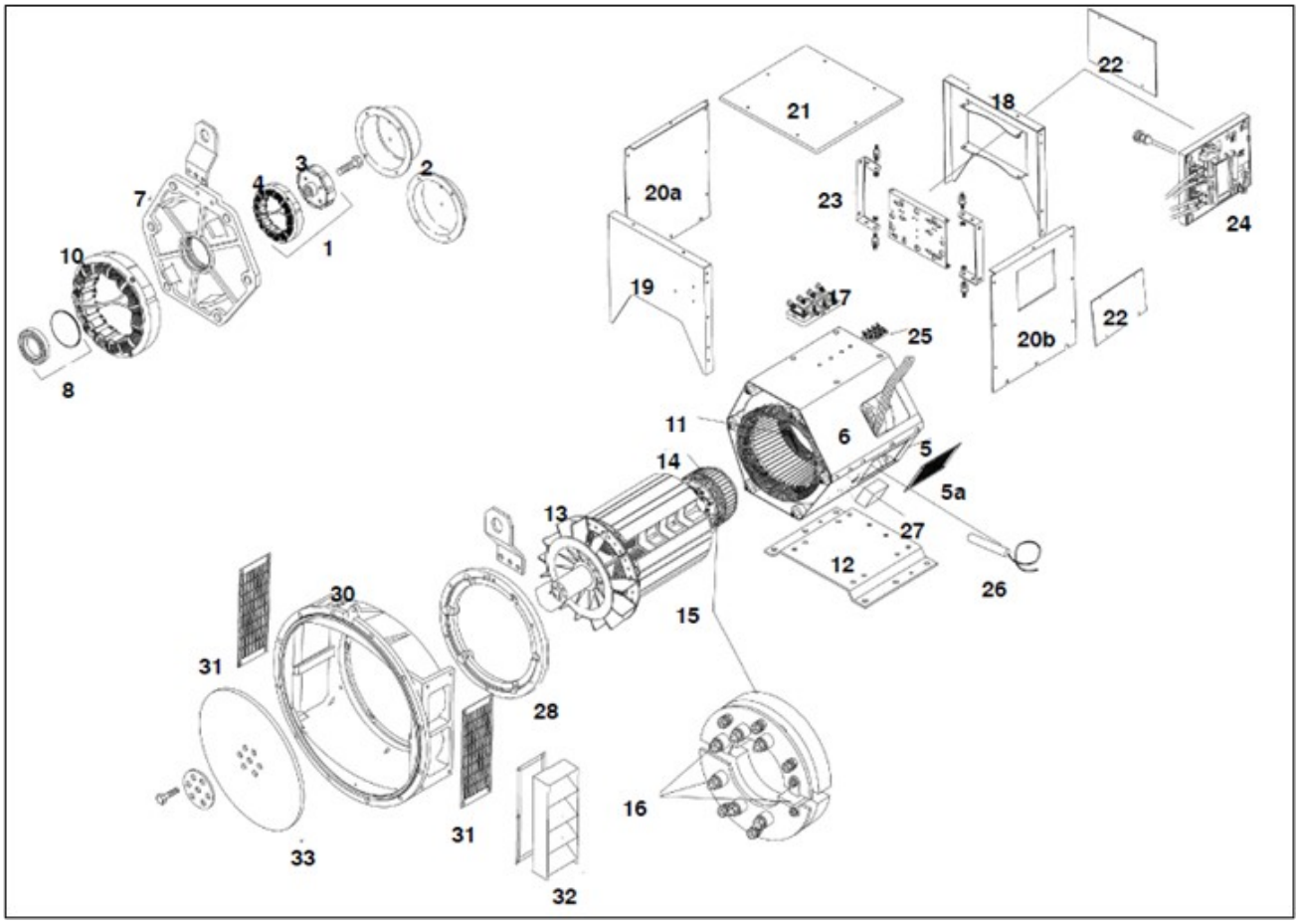

FIGURE 13. UCI274 (C-H) ONE BEARING ALTERNATOR

TABLE 14. UCI274 (C-H) ONE BEARING ALTERNATOR

Item	Part No.	Description	Qty.	Recommended Service Part	RSL Class	RSL Type
1	45-0075A	Complete PMG Upfit Kit	1	-	-	-
2	450-14360	PMG Cover (Cover Included In Above Kit)	1	-	-	-
2	450-14450	Non PMG Cover	1	-	-	-
3	45-1080	Current PMG Rotor/Stator Repair Kit	1	Yes	A	SC
4	45-1080	Current PMG Rotor/Stator Repair Kit	1	Yes	A	SC
5	330-10386	Main Stator Bottom Cover (C-D)	1	-	-	-
5	330-10387	Main Stator Bottom Cover (E-F)	1	-	-	-
5	330-10388	Main Stator Bottom Cover (G)	1	-	-	-

 Copyright © 2025 Cummins Inc.

Item	Part No.	Description	Qty.	Recommended Service Part	RSL Class	RSL Type
5	330-10389	Main Stator Bottom Cover (H)	1	-	-	-
5a	330-10020	Air Inlet Cover	2	-	-	-
5a	330-10099	Air Inlet Cover (Air Filter)	2	-	-	-
6	330-10381	Main Stator Top Cover (C-D)	1	-	-	-
6	330-10382	Main Stator Top Cover (E-F)	1	-	-	-
6	330-10383	Main Stator Top Cover (G)	1	-	-	-
6	330-10384	Main Stator Bottom Cover (H)	1	-	-	-
7	330-10002	NDE Bracket	1	-	-	-
7	330-10258	NDE Bracket (For Use With Bearing RTD)	1	-	-	-
8	45-0868	NDE Bearing Kit	1	Yes	A	M
10	230-1497	Exciter Stator 40 mm (C-D)	1	Yes	A	SC
10	330-1280	Exciter Stator 60 mm (E-H)	1	Yes	A	SC
10	A052B588	Exciter Stator 40 mm Severe Environmental (C-D)	1	Yes	A	SC
10	A052B648	Exciter Stator 60 mm Severe Environmental (E-H)	1	Yes	A	SC
11	QMSN	Main Stator Bar Assembly	1	-	-	-
12	330-10137	Foot	1	-	-	-
13	QMSN	Main Rotor Assembly	2	-	-	-
14	210-1037	Exciter Rotor 40 mm (E-G)	1	Yes	A	SC
14	310-1028	Exciter Rotor 60 mm (E-G)	1	Yes	A	SC
15	45-0428	Rotating Rectifier Assembly	1	Yes	A	SC
16	RSK-2001	Diode Forward/Reverse And Varistor Kit	1	Yes	A	SC
17	230-10624	Main Terminal Board 7 Pin	1	-	-	-
17	450-15617	Main Terminal Board 8 Pin	1	-	-	-
18	330-10602	Terminal Box End Panel NDE (Access) And ENC500	1	-	-	-
18	330-10622	Terminal Box End Panel NDE (Plain) And ENC500	1	-	-	-
18	330-10634	Terminal Box End Panel NDE (Plain) (Low Profile)	1	-	-	-
19	330-10601	Terminal Box End Panel DE (Plain) And ENC500	1	-	-	-
19	330-10630	Terminal Box End Panel DE (Access)	1	-	-	-

Item	Part No.	Description	Qty.	Recommended Service Part	RSL Class	RSL Type
19	330-10634	Terminal Box End Panel De(Plain) (Low Profile)	1	-	-	-
20a	330-10600	Terminal Box Side Panel (Left Hand) (Low Profile)	1	-	-	-
20a	330-10603	Terminal Box Side Panel (Left Hand) (Plain) And ENC500	1	-	-	-
20a	330-10605	Terminal Box Side Panel (Left Hand) (Air Filter) And ENC500	1	-	-	-
20a	330-10606	Terminal Box Side Panel (Right Hand) (Air Filter) (Aperture) And ENC500	1	-	-	-
20a	330-10611	Terminal Box Side Panel (Vent) (Gland-Plate (Left Hand) And ENC500 (J-K)	1	-	-	-
20a	330-10612	Terminal Box Side Panel (Vent) (Aperture) (Right Hand) And ENC500 (J-K)	1	-	-	-
20a	330-10613	Terminal Box Side Panel (Vent) (Plain) (Left Hand) And ENC500 (J-K)	1	-	-	-
20a	330-10614	Terminal Box Side Panel (Vent) (Plain) (Right Hand) And ENC500 (J-K)	1	-	-	-
20a	330-10615	Terminal Box Side Panel (Right Hand) (Air Filter) And ENC500	1	-	-	-
20a	330-10617	Terminal Box Side Panel (Left Hand) (Access) And ENC500	1	-	-	-
20a	330-10620	Terminal Box Side Panel (Vent) (Aperture) (Left Hand) And ENC500 (J-K)	1	-	-	-
20a	330-10636	Terminal Box Side Panel (Right Hand) (Aperture) (Low Profile)	1	-	-	-
21	330-10069	Terminal Box Lid	1	-	-	-
22	410-10536	AVR Cover Plate From (28/11/04)	1	-	-	-
22	450-14310	AVR Cover Plate	1	-	-	-
23	45-0742	AVR Mounting Bracket	1	-	-	-
24	A062Y338	AVR MX322	1	Yes	A	SC
24	E000-23212/1P	AVR MX321	1	Yes	A	SC
24	E000-23215/1P	AVR MX321 UL	1	Yes	A	SC

 Copyright © 2025 Cummins Inc.

Item	Part No.	Description	Qty.	Recommended Service Part	RSL Class	RSL Type
24	E000-23408/1P	AVR MX341 UL	1	Yes	A	SC
24	E000-23412/1P	AVR MX341	1	Yes	A	SC
24	E000-24210/1P	AVR SX421	1	Yes	A	SC
24	E000-24403/1P	AVR AS440	1	Yes	A	SC
24	E000-24403/1P	AVR AS440	1	Yes	A	SC
24	E000-24408/1P	AVR AS440 UL Approved	1	Yes	A	SC
24	E000-24408/1P	AVR AS440 UL Approved	1	Yes	A	SC
25	450-15489	Auxiliary Terminal Board	2	-	-	-
26	A053N107	Heater 110-125 V UL Cert	1	-	-	-
26	A053N108	Heater 220-260 V UL Cert	1	-	-	-
26	A053X265	Heater Kit 110-125 V To Include Term Box For Retro UL Cert	1	-	-	-
26	A053X267	Heater Kit 220-260 V To Include Term Box For Retro UL Cert	1	-	-	-
27	45-0024	Terminal Box For Heaters	1	-	-	-
28	330-10001	DE Adaptor Ring	1	-	-	-
30	45-0520	DE Adaptor Kit SAE 2	1	-	-	-
30	45-0521	DE Adaptor Kit SAE 3	1	-	-	-
30	45-0690	DE Adaptor Kit SAE 1	1	-	-	-
31	310-10400	DE Screen (Included In Adaptor Kits)	1	-	-	-
32	45-0633	DE Louvre	1	-	-	-
33	45-0764	Coupling Kit SAE 10	1	-	-	-
33	45-0765	Coupling Kit SAE 11.5	1	-	-	-
33	45-0766	Coupling Kit SAE 14	1	-	-	-
33	45-0767	Coupling Kit Delco 17.75	1	-	-	-
33	45-0768	Coupling Kit SAE 11.5 (For SAE 1 New)	1	-	-	-

15 UCI274 (C-H) Two Bearing (4 Pole) Alternator

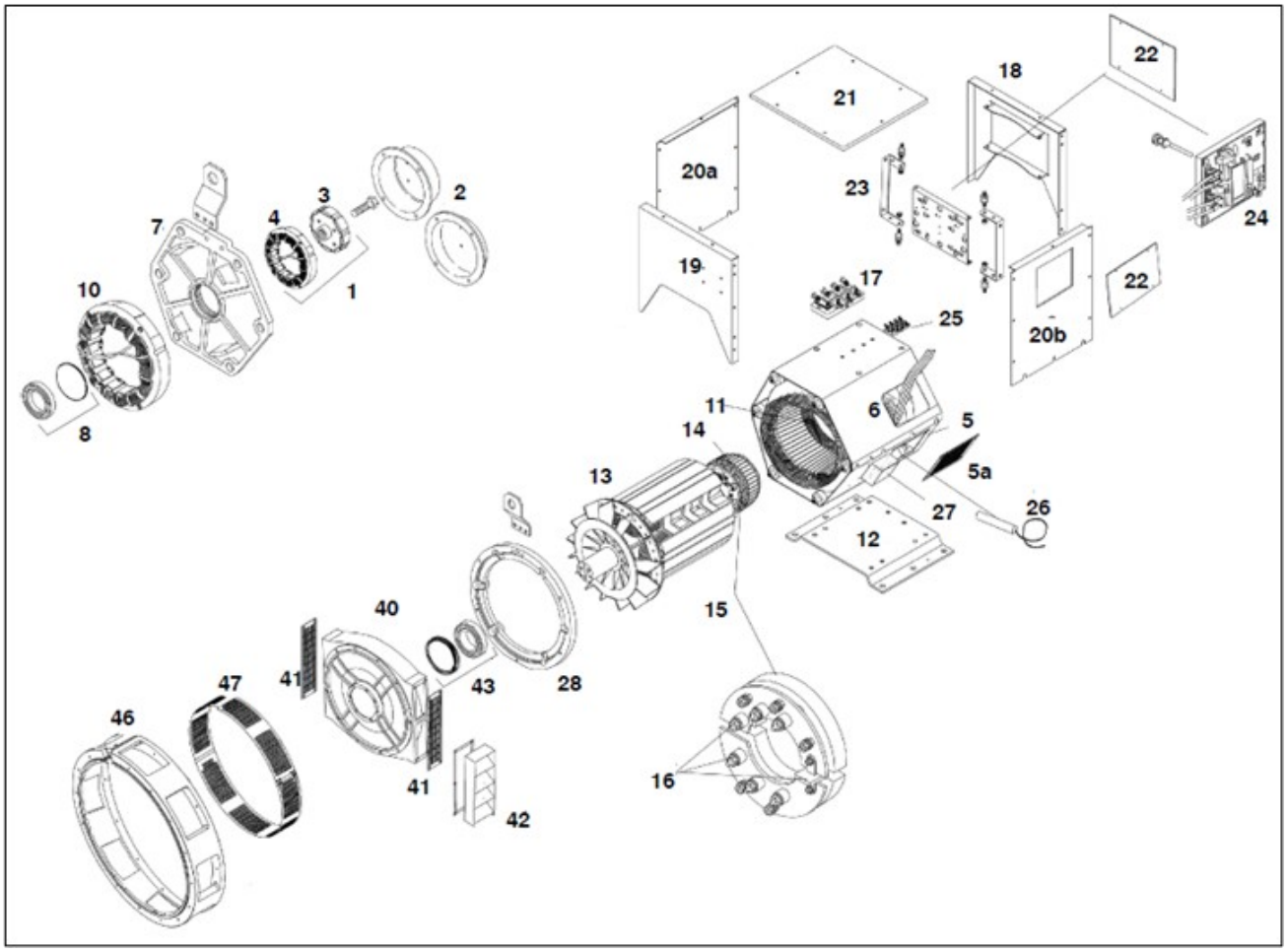

FIGURE 14. UCI274 (C-H) TWO BEARING (4 POLE) ALTERNATOR PARTS DRAWING

TABLE 15. UCI274 (C-H) TWO BEARING (4 POLE) ALTERNATOR PARTS LIST

Item	Part No.	Description	Qty.	Recommended Service Part	RSL Class	RSL Type
1	45-0075A	Complete PMG Upfit Kit	1	-	-	-
2	450-14360	PMG Cover (Cover Included In Above Kit)	1	-	-	-
2	450-14450	Non PMG Cover	1	-	-	-
3	45-1080	Current PMG Rotor/Stator Repair Kit	1	Yes	A	SC
4	45-1080	Current PMG Rotor/Stator Repair Kit	1	Yes	A	SC
5	330-10386	Main Stator Bottom Cover (C-D)	1	-	-	-
5	330-10387	Main Stator Bottom Cover (E-F)	1	-	-	-

 Copyright © 2025 Cummins Inc.

Item	Part No.	Description	Qty.	Recommended Service Part	RSL Class	RSL Type
5	330-10388	Main Stator Bottom Cover (G)	1	-	-	-
5	330-10389	Main Stator Bottom Cover (H)	1	-	-	-
5a	330-10020	Air Inlet Cover	2	-	-	-
5a	330-10099	Air Inlet Cover (Air Filter)	2	-	-	-
6	330-10381	Main Stator Top Cover (C-D)	1	-	-	-
6	330-10382	Main Stator Top Cover (E-F)	1	-	-	-
6	330-10383	Main Stator Top Cover (G)	1	-	-	-
6	330-10384	Main Stator Bottom Cover (H)	1	-	-	-
7	330-10002	NDE Bracket	1	-	-	-
7	330-10258	NDE Bracket (For use with Bearing RTD's)	1	-	-	-
8	45-0868	NDE Bearing Kit	1	Yes	A	M
10	230-1497	Exciter Stator 40 mm (C-D)	1	Yes	A	SC
10	330-1280	Exciter Stator 60 mm (E-H)	1	Yes	A	SC
10	A052B588	Exciter Stator 40 mm Severe Environmental (C-D)	1	Yes	A	SC
10	A052B648	Exciter Stator 60 mm Severe Environmental (E-H)	1	Yes	A	SC
11	QMSN	Main Stator Bar Assembly	1	-	-	-
12	330-10137	Foot	1	-	-	-
13	QMSN	Main Rotor Assembly	2	-	-	-
14	210-1037	Exciter Rotor 30 mm (C-D)	1	Yes	A	SC
14	310-1028	Exciter Rotor 60 mm (E-G)	1	Yes	A	SC
15	45-0428	Rotating Rectifier Assembly	1	Yes	A	SC
16	RSK-2001	Diode Forward/Reverse And Varistor Kit	1	Yes	A	SC
17	230-10624	Main Terminal board 7 Pin	1	-	-	-
17	450-15617	Main Terminal Board 8 Pin	1	-	-	-
18	330-10602	Terminal Box End Panel NDE (Access) And ENC500	1	-	-	-
18	330-10618	Terminal Box End Panel NDE (Plain) (Low Profile)	1	-	-	-
18	330-10622	Terminal Box End Panel NDE (Plain) And ENC500	1	-	-	-
19	330-10601	Terminal Box End Panel DE (Plain) And ENC500	1	-	-	-

Copyright © 2025 Cummins Inc.

Item	Part No.	Description	Qty.	Recommended Service Part	RSL Class	RSL Type
19	330-10630	Terminal Box End Panel DE (Access)	1	-	-	-
19	330-10634	Terminal Box End Panel NDE (Plain) (Low Profile)	1	-	-	-
19	A041H036	Terminal Box End Panel DE (Aperture) (Low Profile)	1	-	-	-
20a	330-10600	Terminal Box Side Panel (Left Hand) (Low Profile)	1	-	-	-
20a	330-10603	Terminal Box Side Panel (Left Hand) (Plain) And ENC500	1	-	-	-
20a	330-10605	Terminal Box Side Panel (Left Hand) (Air Filter) And ENC500	1	-	-	-
20a	330-10611	Terminal Box Side Panel (Vent) (Gland-Plate (Left Hand) And ENC500 (J-K)	1	-	-	-
20a	330-10613	Terminal Box Side Panel (Vent) (Plain) (Left Hand) And ENC500 (J-K)	1	-	-	-
20a	330-10617	Terminal Box Side Panel (Left Hand) (Access) And ENC500	1	-	-	-
20a	330-10620	Terminal Box Side Panel (Vent) (Aperture) (Left Hand) And ENC500 (J-K)	1	-	-	-
20b	330-10606	Terminal Box Side Panel (Right Hand) (Air Filter) (Aperture) And ENC500	1	-	-	-
20b	330-10609	Terminal Box Side Panel (Right Hand) (Plain) And ENC500	1	-	-	-
20b	330-10612	Terminal Box Side Panel (Vent) (Aperture) (Right Hand) And ENC500 (J-K)	1	-	-	-
20b	330-10614	Terminal Box Side Panel (Vent) (Plain) (Right Hand) And ENC500 (J-K)	1	-	-	-
20b	330-10615	Terminal Box Side Panel (Right Hand) (Air Filter) And ENC500	1	-	-	-
20b	330-10636	Terminal Box Side Panel (Right Hand) (Aperture) (Low Profile)	1	-	-	-
21	330-10069	Terminal box lid	1	-	-	-
22	410-10536	AVR Cover Plate From (28/11/04)	1	-	-	-

 Copyright © 2025 Cummins Inc.

Item	Part No.	Description	Qty.	Recommended Service Part	RSL Class	RSL Type
22	450-14310	AVR Cover Plate To (28/11/04)	1	-	-	-
23	45-0742	AVR Mounting Bracket	1	-	-	-
24	A062Y338	AVR MX322	1	Yes	A	SC
24	E000-23212/1P	AVR MX321	1	Yes	A	SC
24	E000-23215/1P	AVR MX321 UL	1	Yes	A	SC
24	E000-23408/1P	AVR MX341 UL	1	Yes	A	SC
24	E000-23412/1P	AVR MX341	1	Yes	A	SC
24	E000-24210/1P	AVR SX421	1	Yes	A	SC
24	E000-24403/1P	AVR AS440	1	Yes	A	SC
24	E000-24408/1P	AVR AS440 UL Approved	1	Yes	A	SC
25	450-15489	Auxiliary Terminal Board	2	-	-	-
26	A053N107	Heater 110-125 V UL Cert	1	-	-	-
26	A053N108	Heater 220-260 V UL Cert	1	-	-	-
26	A053X265	Heater Kit 110-125 V To Include Term Box For Retro UL Cert	1	-	-	-
26	A053X267	Heater Kit 220-260 V To Include Term Box For Retro UL Cert	1	-	-	-
27	45-0024	Terminal Box For Heaters	1	-	-	-
28	330-10001	DE Adaptor Ring	1	-	-	-
40	330-10076	DE Bracket	1	-	-	-
41	310-10049	DE Screen	2	-	-	-
42	45-0634	Louvre	1	-	-	-
43	45-0367	DE Bearing Kit	1	-	-	-
46	45-0522	Adaptor Kit SAE 1	1	-	-	-
46	45-0523	Adaptor Kit SAE 2	1	-	-	-
46	45-0524	Adaptor Kit SAE 3	1	-	-	-
46	45-0863	Adaptor Kit DIN 1	1	-	-	-
46	45-0912	Adaptor Kit DIN 2	1	-	-	-
47	See No.46	Adaptor Cover (Included In Adaptor Kits)	1	-	-	-

Copyright © 2025 Cummins Inc.

16 HC434 (C-F) One Bearing Alternator

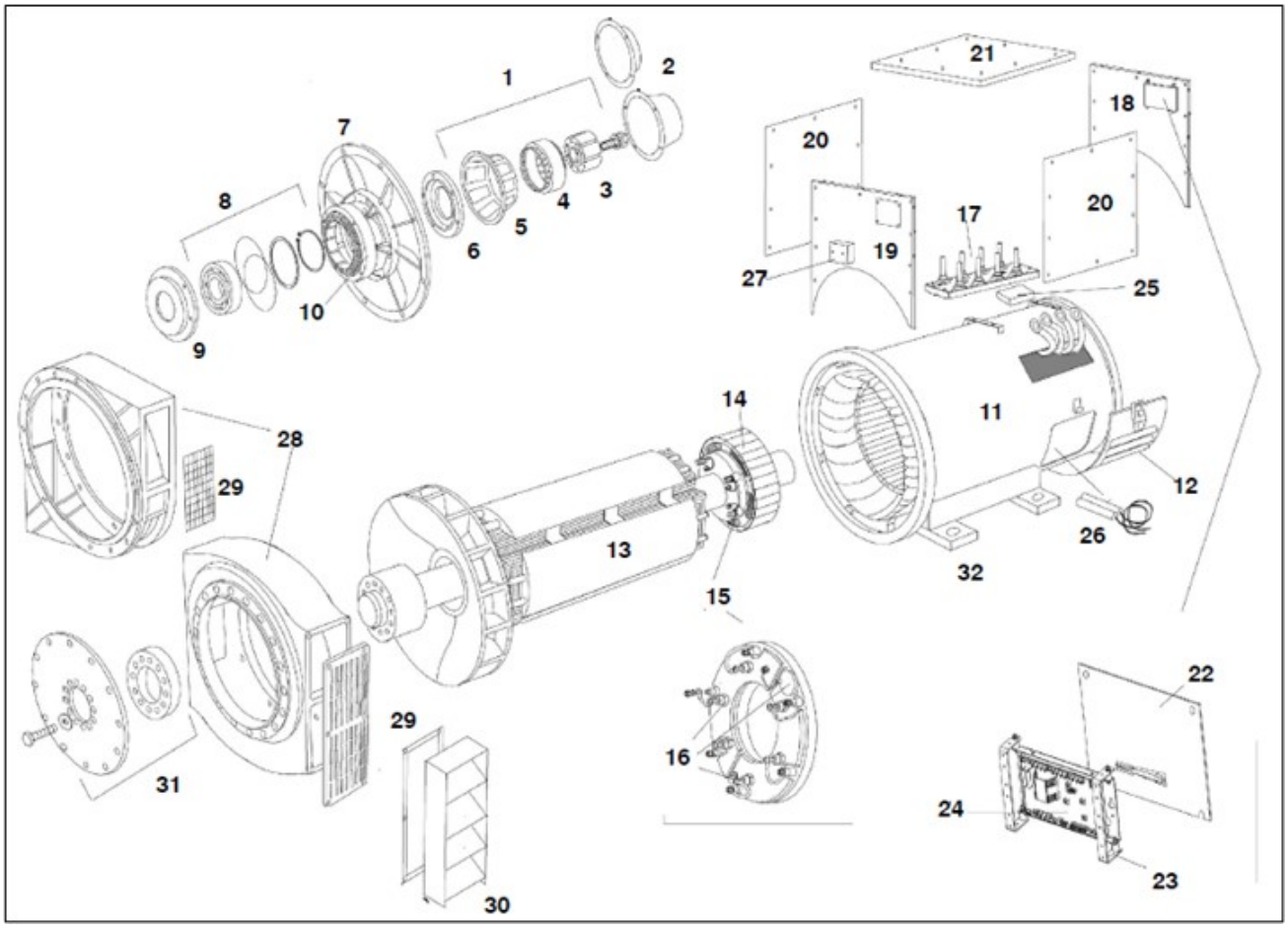

FIGURE 15. HC434 (C-F) ONE BEARING ALTERNATOR PARTS DRAWING

TABLE 16. HC434 (C-F) ONE BEARING ALTERNATOR PARTS LIST

Item	Part No.	Description	Qty.	Recommended Service Part	RSL Class	RSL Type
1	45-0318A	Complete PMG Upfit Kit	1	Yes	B	SC
1	45-0059A	Complete PMG Upfit Kit (To 18/08/00) (Obsolete)	1	-	-	-
2	410-10704	PMG Cover Only Included In Item 1	1	-	-	-
2	410-10705	Non PMG Cover (From 18/08/00)	1	-	-	-
2	450-12590	Non PMG Cover (To 18/08/00)	1	-	-	-
2	450-13350	PMG Cover Only Incl In Kit 45-0059a	1	-	-	-
3	45-1082	PMG Rotor/Stator Repair Kit	1	Yes	A	SC
4	45-1082	PMG Rotor/Stator Repair Kit	1	Yes	A	SC

 Copyright © 2025 Cummins Inc.

Item	Part No.	Description	Qty.	Recommended Service Part	RSL Class	RSL Type
5	SEE NO. 1	PMG Crown (If Fitted)	1	-	-	-
6	410-10267	NDE Bearing Cap To (18/08/2000)	5	-	-	-
7	410-10256	NDE Bracket To (02/2000)	3	-	-	-
7	410-10703	NDE Bracket From (02/2000)	1	-	-	-
8	45-0320	NDE Bearing Kit (Sealed) From (30/09/00)	1	Yes	B	M
8	45-0291	NDE Bearing Kit (Sealed) To (18/08/00)	1	-	-	-
9	QMSN	NDE Bearing Cartridge To (18/08/2000)	1	-	-	-
10	410-1052	Exciter Stator 50 mm	1	Yes	A	SC
10	A052D639	Exciter Stator 50 mm Severe Environmental	1	Yes	A	SC
11	QMSN	Main Stator Frame Assembly	1	-	-	-
12	410-10799	NDE Air Inlet Cover (Industrial)	1	-	-	-
12	458-20200	NDE Air Inlet Cover (Louvred)	1	-	-	-
12	458-20400	NDE Air Inlet Cover (Air Filter)	1	-	-	-
13	QMSN	Main Rotor Assembly	1	-	-	-
14	410-1194	Exciter Rotor 50 mm From (22/11/99)	1	Yes	A	SC
14	458-22800	Exciter Rotor 50 mm To (22/11/99)	1	Yes	A	SC
15	450-16016	Rotating Rectifier Assembly	1	Yes	A	SC
16	RSK-5001	Diode Forward/Reverse And Varistor Kit	1	Yes	A	SC
17	410-10720	Main Terminal Board	1	-	-	-
18	410-10494	Terminal Box End Panel NDE To (21/07/02)	9	-	-	-
18	410-10785	Terminal Box End Panel NDE From (21/07/02)	1	-	-	-
18	410-10790	Terminal Box End Panel NDE Reconnectable 410-10790	1	-	-	-
18	410-10872	Terminal Box End Panel NDE From (EU Machine Dir.)	1	-	-	-
19	410-10495	Terminal Box End Panel DE To (21/07/02)	11	-	-	-
19	410-10784	Terminal Box End Panel DE From (21/07/02)	1	-	-	-

Item	Part No.	Description	Qty.	Recommended Service Part	RSL Class	RSL Type
19	410-10789	Terminal Box End Panel NDE Reconstructable	1	-	-	-
19	410-10871	Terminal Box End Panel DE From (EU Machine Dir.)	1	-	-	-
20	410-10496	Terminal Box Side Panel To (21/07/98)	13	-	-	-
20	410-10786	Terminal Box Side Panel From (21/07/98)	2	-	-	-
20	410-10788	Terminal Box Side Panel (Gland-Plate)	2	-	-	-
20	410-10803	Terminal Box Side Panel (Air Filter)	2	-	-	-
20	410-10819	Terminal Box Side Panel (AVR/PFC Right Hand)	1	-	-	-
20	410-10859	Terminal Box Side Panel (Air Filter) (EU Machine Dir.)	2	-	-	-
20	410-10873	Terminal Box Side Panel (AVR/PFC Right Hand) (EU Machine Dir.)	1	-	-	-
21	410-10173	Terminal Box Lid To (21/07/98)	1	-	-	-
21	410-10497	Terminal Box Lid From (21/07/98)	15	-	-	-
22	410-10536	AVR Cover Plate To (21/07/02)	1	-	-	-
22	450-15254	AVR Cover Plate (Access)	1	-	-	-
22	450-16413	AVR Plastic Cover (EU Machine Dir.)	1	-	-	-
22	450-16417	AVR Cover (EU Machine Dir. No Mounting Bracket) X 1	1	-	-	-
23	45-0742	AVR Mounting Bracket	1	-	-	-
24	A060B914	AVR DECS-150	1	Yes	A	SC
24	A062Y338	AVR MX322	1	Yes	A	SC
24	E000-23212/1P	AVR MX321	1	Yes	A	SC
24	E000-23215/1P	AVR MX321 UL	1	Yes	A	SC
24	E000-23408/1P	AVR MX341 UL	1	Yes	A	SC
24	E000-23412/1P	AVR MX341	1	Yes	A	SC
24	E000-24403/1P	AVR AS440	1	Yes	A	SC
24	E000-24408/1P	AVR AS440 UL Approved	1	Yes	A	SC
25	450-15489	Auxiliary Terminal Board	2	-	-	-
26	A053M957	Heater 110-125 V UL Cert	1	-	-	-

 Copyright © 2025 Cummins Inc.

Item	Part No.	Description	Qty.	Recommended Service Part	RSL Class	RSL Type
26	A053M965	Heater 220-260 V UL Cert	1	-	-	-
26	A053X245	Heater Kit 110-125 V To Include Term Box For Retro UL Cert	1	-	-	-
26	A053X247	Heater 220-260 V To Include Term Box For Retro UL Cert	1	-	-	-
27	45-0024	Terminal Box For Heaters	1	-	-	-
28	45-0663	DE Adaptor Kit SAE 0	1	-	-	-
28	45-0664	DE Adaptor Kit SAE 0.5	1	-	-	-
28	45-0665	DE Adaptor Kit SAE 1	1	-	-	-
28	45-0721	DE Adaptor Kit SAE 2	1	-	-	-
28	45-0753	DE Adaptor Kit SAE 3	1	-	-	-
28	45-0916	DE Adaptor Kit SAE 1 Round	1	-	-	-
29	410-10762	DE Screen Included In Adaptor Kits	1	-	-	-
30	45-0651	DE Louvre SAE 0.5 And 1	1	-	-	-
30	45-0652	DE Louvre SAE 0	1	-	-	-
31	45-0776	Coupling Kit SAE 11.5	2	-	-	-
31	45-0777	Coupling Kit SAE 14	1	-	-	-
31	45-0778	Coupling Kit SAE 18	1	-	-	-
31	45-0779	Coupling Kit SAE 17.75	1	-	-	-
32	A056D894	Bracket, Foot, F4	1	-	-	-
32	A056V555	Bar, Foot, F4	2	-	-	-
32	A056V557	Bar, Foot, F4	2	-	-	-

Copyright © 2025 Cummins Inc.

17 HC434 (C-F) Two Bearing Alternator

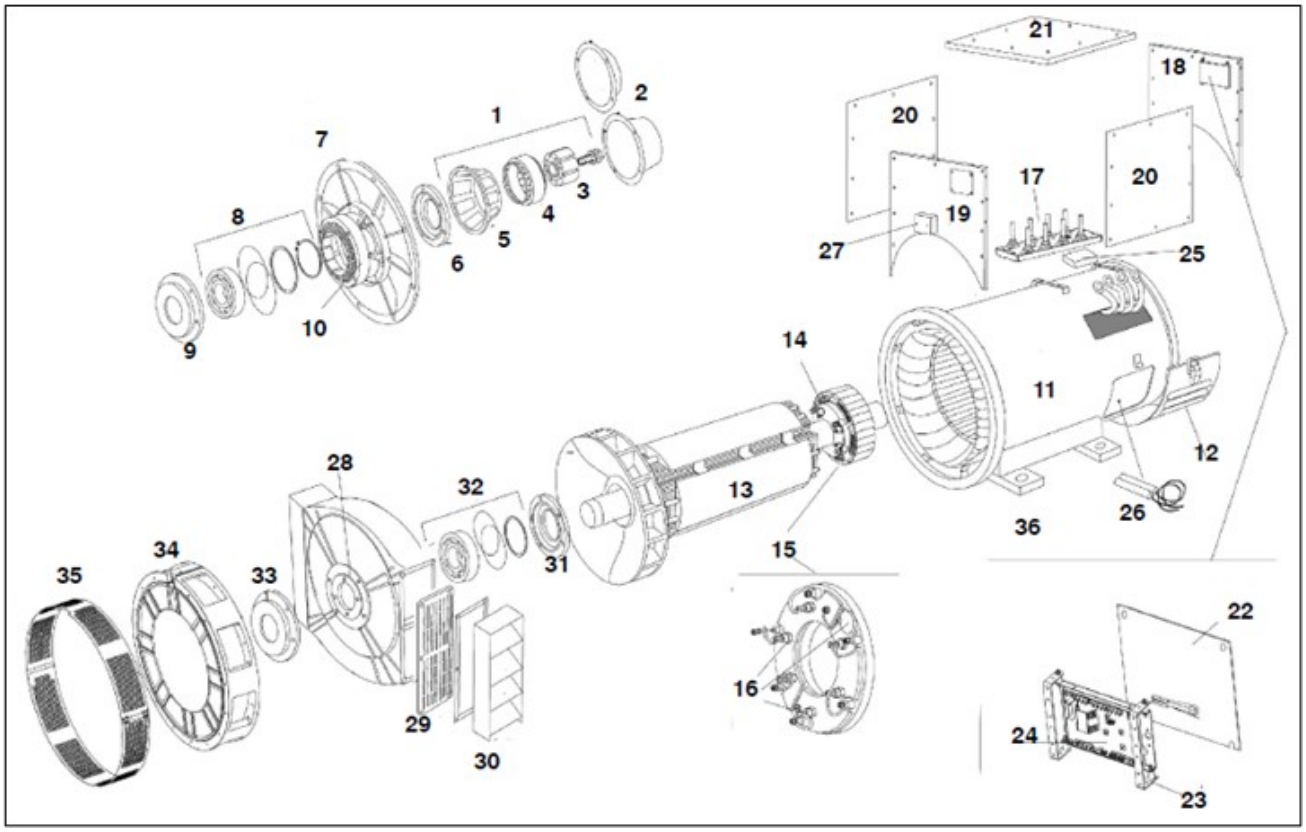

FIGURE 16. HC434 (C-F) TWO BEARING ALTERNATOR PARTS DRAWING

TABLE 17. HC434 (C-F) TWO BEARING ALTERNATOR PARTS LIST

Item	Part No.	Description	Qty.	Recommended Service Part	RSL Class	RSL Type
1	45-0318A	Complete PMG Upfit Kit	1	Yes	B	SC
1	45-0059A	Complete PMG Upfit Kit (To 18/08/00) (Obsolete)	1	-	-	-
2	410-10704	PMG Cover Only Included In Item 1	1	-	-	-
2	410-10705	Non PMG Cover (From 18/08/00)	1	-	-	-
2	450-12590	Non PMG Cover (To 18/08/00)	1	-	-	-
2	450-13350	PMG Cover Only Incl In Kit 45-0059a	1	-	-	-
3	45-1082	PMG Rotor/Stator Repair Kit	1	Yes	A	SC
4	45-1082	PMG Rotor/Stator Repair Kit	1	Yes	A	SC
5	SEE NO. 1	PMG Crown (If Fitted)	1	-	-	-
6	410-10268	NDE Bearing Cap To (18/08/2000)	7	-	-	-

 Copyright © 2025 Cummins Inc.

Item	Part No.	Description	Qty.	Recommended Service Part	RSL Class	RSL Type
7	410-10256	NDE Bracket To (02/2000)	4	-	-	-
7	410-10703	NDE Bracket From (02/2000)	1	-	-	-
8	45-0320	NDE Bearing Kit (Sealed) From (30/09/00)	1	Yes	B	M
8	45-0291	NDE Bearing Kit (Sealed) to (18/08/00)	1	Yes	B	M
9	458-12960	NDE Bearing Cartridge To (18/08/2000)	1	-	-	-
10	410-1052	Exciter Stator 50 mm	1	Yes	A	SC
10	A052D639	Exciter Stator 50 mm Severe Environmental	1	Yes	A	SC
11	QMSN	Main Stator Frame Assembly	1	-	-	-
12	410-10799	NDE Air Inlet Cover (Industrial)	1	-	-	-
12	458-20200	NDE Air Inlet Cover (Louvred)	1	-	-	-
12	458-20400	NDE Air Inlet Cover (Air Filter)	1	-	-	-
13	QMSN	Main Rotor Assembly	1	-	-	-
14	410-1194	Exciter Rotor 50 mm From (22/11/99)	1	Yes	A	SC
14	458-22800	Exciter Rotor 50 mm To (22/11/99)	1	Yes	A	SC
15	450-16016	Rotating Rectifier Assembly	1	Yes	A	SC
16	RSK-5001	Diode Forward/Reverse And Varistor Kit	1	Yes	A	SC
17	410-10720	Main Terminal Board	1	-	-	-
18	410-10494	Terminal Box End Panel NDE To (21/07/02)	10	-	-	-
18	410-10785	Terminal Box End Panel NDE From (21/07/02)	1	-	-	-
18	410-10790	Terminal Box End Panel NDE Reconnectable 410-10790	1	-	-	-
18	410-10872	Terminal Box End Panel NDE From (EU Machine Dir.)	1	-	-	-
19	410-10495	Terminal Box End Panel DE To (21/07/02)	12	-	-	-
19	410-10784	Terminal Box End Panel DE From (21/07/02)	1	-	-	-
19	410-10789	Terminal Box End Panel NDE Reconstructable	1	-	-	-

Item	Part No.	Description	Qty.	Recommended Service Part	RSL Class	RSL Type
19	410-10871	Terminal Box End Panel DE From (EU Machine Dir.)	1	-	-	-
20	410-10496	Terminal Box Side Panel To (21/07/98)	14	-	-	-
20	410-10786	Terminal Box Side Panel From (21/07/98)	2	-	-	-
20	410-10788	Terminal Box Side Panel (Gland-Plate)	2	-	-	-
20	410-10803	Terminal Box Side Panel (Air Filter)	2	-	-	-
20	410-10819	Terminal Box Side Panel (AVR/PFC Right Hand)	1	-	-	-
20	410-10859	Terminal Box Side Panel (Air Filter) (EU Machine Dir.)	2	-	-	-
20	410-10873	Terminal Box Side Panel (AVR/PFC Right Hand) (EU Machine Dir.)	1	-	-	-
21	410-10173	Terminal Box Lid To (21/07/98)	2	-	-	-
21	410-10497	Terminal Box Lid From (21/07/98)	18	-	-	-
22	410-10536	AVR Cover Plate To (21/07/02)	1	-	-	-
22	450-15254	AVR Cover Plate (Access)	1	-	-	-
22	450-16413	AVR Plastic Cover (EU Machine Dir.)	1	-	-	-
22	450-16417	AVR Cover (EU Machine Dir. No Mounting Bracket) X 1	1	-	-	-
23	45-0742	AVR Mounting Bracket	1	-	-	-
24	A060B914	AVR DECS-150	1	Yes	A	SC
24	A062Y338	AVR MX322	1	Yes	A	SC
24	E000-23212/1P	AVR MX322	1	Yes	A	SC
24	E000-23215/1P	AVR MX321 UL	1	Yes	A	SC
24	E000-23408/1P	AVR MX341 UL	1	Yes	A	SC
24	E000-23412/1P	AVR MX341	1	Yes	A	SC
24	E000-24403/1P	AVR AS440	1	Yes	A	SC
24	E000-24408/1P	AVR AS440 UL Approved	2	Yes	A	SC
25	450-15489	Auxiliary Terminal Board	2	-	-	-
26	A053M957	Heater 110-125 V UL Cert	1	-	-	-
26	A053M965	Heater 220-260 V UL Cert	1	-	-	-

 Copyright © 2025 Cummins Inc.

Item	Part No.	Description	Qty.	Recommended Service Part	RSL Class	RSL Type
26	A053X245	Heater Kit 110-125 V To Include Term Box For Retro UL Cert	1	-	-	-
26	A053X247	Heater 220-260 V To Include Term Box For Retro UL Cert	1	-	-	-
27	45-0024	Terminal Box For Heaters	1	-	-	-
28	410-10781	DE Bracket From (12/09/04)	1	-	-	-
28	458-11170	DE Bracket To (12/09/04)	1	-	-	-
29	458-10260	DE Bracket Screen	1	-	-	-
30	45-0653	DE Louvre	1	-	-	-
31	410-10708	DE Bearing Cap Outer From (18/08/00)	1	-	-	-
31	458-10130	DE Bearing Cartridge To (18/08/00)	1	-	-	-
32	45-0319	DE Bearing Kit (Sealed) From (18/08/00)	1	Yes	B	M
32	45-0290	DE Bearing Kit (Sealed) To (18/08/00)	1	Yes	B	M
33	410-10269	DE Bearing Cap Outer To (18/08/00)	8	-	-	-
33	410-10706	DE Bearing Cap Outer From (18/08/00)	2	-	-	-
34	45-0675	2 Bearing Adaptor Kit (SAE 0)	1	-	-	-
34	45-0676	2 Bearing Adaptor Kit (SAE 1)	1	-	-	-
34	45-0677	2 Bearing Adaptor Kit (SAE 0.5)	1	-	-	-
34	45-0910	2 Bearing Adaptor Kit (DIN 1)	1	-	-	-
35	INCLUDED IN 34	DE Cover Screen (Included In Kits)	2	-	-	-
36	A056D894	Bracket, Foot, F4	1	-	-	-
36	A056V555	Bar, Foot, F4	2	-	-	-
36	A056V557	Bar, Foot, F4	2	-	-	-

Copyright © 2025 Cummins Inc.

18 S4 (C-F) One Bearing Alternator

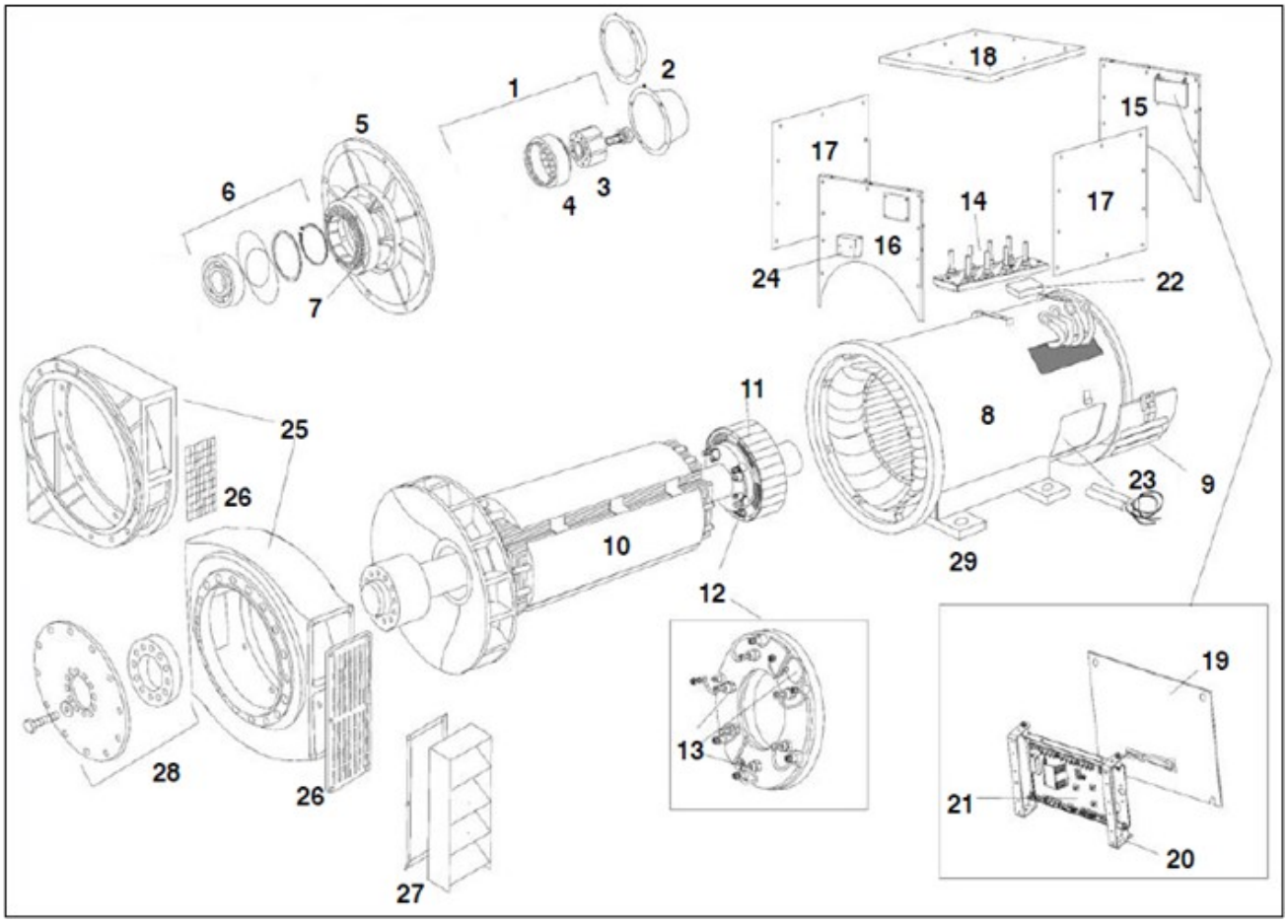

FIGURE 17. S4 (C-F) ONE BEARING ALTERNATOR PARTS DRAWING

TABLE 18. S4 (C-F) ONE BEARING ALTERNATOR PARTS LIST

Item	Part No.	Description	Qty.	Recommended Service Part	RSL Class	RSL Type
1	45-0318A	Complete PMG Upfit Kit	1	Yes	B	SC
2	410-10704	PMG Cover Only Included In Item 1	1	-	-	-
2	410-10705	Non PMG Cover (From 18/08/00)	1	-	-	-
3	45-1082	PMG Rotor/Stator Repair Kit	1	Yes	A	SC
4	45-1082	PMG Rotor/Stator Repair Kit	1	Yes	A	SC
5	410-10703	NDE Bracket From (02/2000)	1	-	-	-
6	45-0320	NDE Bearing Kit (Sealed) From (30/09/00)	1	Yes	B	M
7	410-1052	Exciter Stator 50 mm	1	Yes	A	SC
7	A052D639	Exciter Stator 50 mm Severe Environmental	1	Yes	A	SC
8	QMSN	Main Stator Frame Assembly	1	-	-	-

 Copyright © 2025 Cummins Inc.

Item	Part No.	Description	Qty.	Recommended Service Part	RSL Class	RSL Type
9	410-10799	NDE Air Inlet Cover (Industrial)	1	-	-	-
9	458-20200	NDE Air Inlet Cover (Louvred)	1	-	-	-
9	458-20400	NDE Air Inlet Cover (Air Filter)	1	-	-	-
10	QMSN	Main Rotor Assembly	1	-	-	-
11	410-1194	Exciter Rotor 50 mm From (22/11/99)	1	Yes	A	SC
12	450-16016	Rotating Rectifier Assembly	1	Yes	A	SC
13	RSK-5001	Diode Forward/Reverse And Varistor Kit	1	Yes	A	SC
14	410-10720	Main Terminal Board	1	-	-	-
15	410-10785	Terminal Box End Panel NDE From (21/07/02)	1	-	-	-
15	410-10790	Terminal Box End Panel NDE Reconstructable 410-10790	1	-	-	-
15	410-10872	Terminal Box End Panel NDE From (EU Machine Dir.)	1	-	-	-
16	410-10784	Terminal Box End Panel DE From (21/07/02)	1	-	-	-
16	410-10789	Terminal Box End Panel NDE Reconstructable	1	-	-	-
16	410-10871	Terminal Box End Panel DE From (EU Machine Dir.)	1	-	-	-
17	410-10786	Terminal Box Side Panel From (21/07/98)	2	-	-	-
17	410-10788	Terminal Box Side Panel (Gland-Plate)	2	-	-	-
17	410-10803	Terminal Box Side Panel (Air Filter)	2	-	-	-
17	410-10819	Terminal Box Side Panel (AVR/PFC Right Hand)	1	-	-	-
17	410-10859	Terminal Box Side Panel (Air Filter) (EU Machine Dir.)	2	-	-	-
17	410-10873	Terminal Box Side Panel (AVR/PFC Right Hand) (EU Machine Dir.)	1	-	-	-
18	410-10497	Terminal Box Lid From (21/07/98)	16	-	-	-
19	450-16417	AVR Cover (EU Machine Dir. No Mounting Bracket) X 1	1	-	-	-
20	45-0742	AVR Mounting Bracket	1	-	-	-

Item	Part No.	Description	Qty.	Recommended Service Part	RSL Class	RSL Type
21	A060B914	AVR DECS-150	1	Yes	A	SC
21	A062Y338	AVR MX322	1	Yes	A	SC
21	E000-23212/1P	AVR MX321	1	Yes	A	SC
21	E000-23215/1P	AVR MX321 UL	1	Yes	A	SC
21	E000-23408/1P	AVR MX341 UL	1	Yes	A	SC
21	E000-23412/1P	AVR MX341	1	Yes	A	SC
21	E000-24403/1P	AVR AS440	1	Yes	A	SC
21	E000-24408/1P	AVR AS440 UL Approved	1	Yes	A	SC
22	450-15489	Auxiliary Terminal Board	2	-	-	-
23	A053M957	Heater 110-125 V UL Cert.	1	-	-	-
23	A053M965	Heater 220-260 V UL Cert.	1	-	-	-
23	A053X245	Heater Kit 110-125 V To Include Term Box For Retro UL Cert	1	-	-	-
23	A053X247	Heater 220-260 V To Include Term Box For Retro UL Cert	1	-	-	-
24	45-0024	Terminal Box For Heaters	1	-	-	-
25	45-0663	DE Adaptor Kit SAE 0	1	-	-	-
25	45-0664	DE Adaptor Kit SAE 0.5	1	-	-	-
25	45-0665	DE Adaptor Kit SAE 1	1	-	-	-
25	45-0721	DE Adaptor Kit (SAE 2)	1	-	-	-
25	45-0753	DE Adaptor Kit (SAE 3)	1	-	-	-
25	45-0916	DE Adaptor Kit (SAE 1 Round)	1	-	-	-
26	410-10762	DE Screen Included In Adaptor Kits	2	-	-	-
27	45-0651	DE Louvre (SAE 0.5 And 1)	1	-	-	-
27	45-0652	DE Louvre SAE 0	1	-	-	-
28	45-0776	Coupling Kit SAE 11.5	1	-	-	-
28	45-0777	Coupling Kit SAE 14	1	-	-	-
28	45-0778	Coupling Kit SAE 18	1	-	-	-
28	45-0779	Coupling Kit SAE 17.75	1	-	-	-
29	A056D894	Bracket, Foot, F4	1	-	-	-
29	A056V555	Bar, Foot, F4	2	-	-	-
29	A056V557	Bar, Foot, F4	2	-	-	-

 Copyright © 2025 Cummins Inc.

This page is intentionally blank.

19 S4 (C-F) Two Bearing Alternator

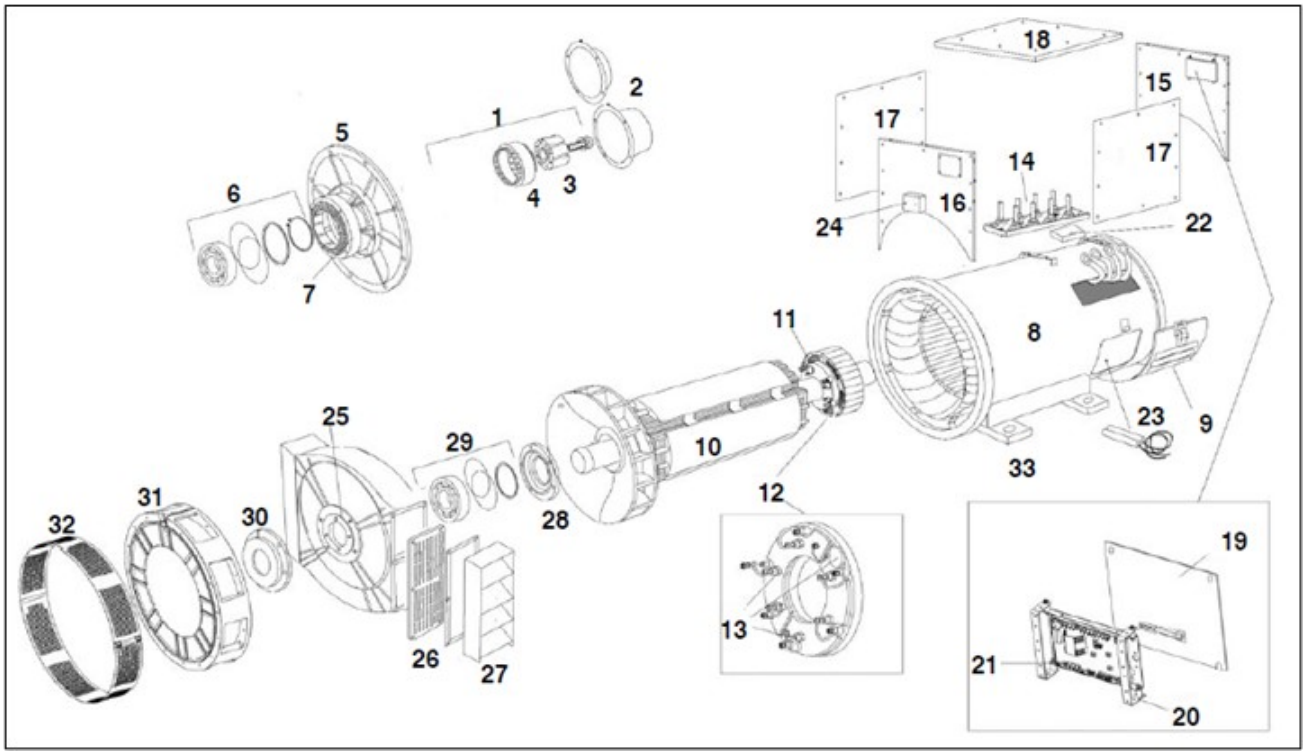

FIGURE 18. S4 (C-F) TWO BEARING ALTERNATOR PARTS DRAWING

TABLE 19. S4 (C-F) TWO BEARING ALTERNATOR PARTS LIST

Item	Part No.	Description	Qty.	Recommended Service Part	RSL Class	RSL Type
1	45-0318A	Complete PMG Upfit Kit	1	Yes	B	SC
2	410-10704	PMG Cover Only Included In Item 1	1	-	-	-
2	410-10705	Non PMG Cover (From 18/08/00)	1	-	-	-
3	45-1082	PMG Rotor/Stator Repair Kit	1	Yes	A	SC
4	45-1082	PMG Rotor/Stator Repair Kit	1	Yes	A	SC
5	410-10703	NDE Bracket From (02/2000)	1	-	-	-
6	45-0320	NDE Bearing Kit (Sealed) From (30/09/00)	1	Yes	B	M
7	410-1052	Exciter Stator 50 mm	1	Yes	A	SC
7	A052D639	Exciter Stator 50 mm Severe Environmental	1	Yes	A	SC
8	QMSN	Main Stator Frame Assembly	1	-	-	-
9	410-10799	NDE Air Inlet Cover (Industrial)	1	-	-	-
9	458-20200	NDE Air Inlet Cover (Louvred)	1	-	-	-

 Copyright © 2025 Cummins Inc.

Item	Part No.	Description	Qty.	Recommended Service Part	RSL Class	RSL Type
9	458-20400	NDE Air Inlet Cover (Air Filter)	1	-	-	-
10	QMSN	Main Rotor Assembly	1	-	-	-
11	410-1194	Exciter Rotor 50 mm From (22/11/99)	1	Yes	A	SC
12	450-16016	Rotating Rectifier Assembly	1	Yes	A	SC
13	RSK-5001	Diode Forward/Reverse And Varistor Kit	1	Yes	A	SC
14	410-10720	Main Terminal Board	1	-	-	-
15	410-10785	Terminal Box End Panel NDE From (21/07/02)	1	-	-	-
15	410-10790	Terminal Box End Panel NDE Reconstructable 410-10790	1	-	-	-
15	410-10872	Terminal Box End Panel NDE From (EU Machine Dir.)	1	-	-	-
16	410-10784	Terminal Box End Panel DE From (21/07/02)	1	-	-	-
16	410-10789	Terminal Box End Panel NDE Reconstructable	1	-	-	-
16	410-10871	Terminal Box End Panel DE From (EU Machine Dir.)	1	-	-	-
17	410-10786	Terminal Box Side Panel From (21/07/98)	2	-	-	-
17	410-10788	Terminal Box Side Panel (Gland-Plate)	2	-	-	-
17	410-10803	Terminal Box Side Panel (Air Filter)	2	-	-	-
17	410-10819	Terminal Box Side Panel (AVR/PFC Right Hand)	1	-	-	-
17	410-10859	Terminal Box Side Panel (Air Filter) (EU Machine Dir.)	2	-	-	-
17	410-10873	Terminal Box Side Panel (AVR/PFC Right Hand) (EU Machine Dir.)	1	-	-	-
18	410-10497	Terminal Box Lid From (21/07/98)	17	-	-	-
19	450-16417	AVR Cover (EU Machine Dir. No Mounting Bracket) X 1	1	-	-	-
20	45-0742	AVR Mounting Bracket	1	-	-	-
21	A060B914	AVR DECS-150	1	Yes	A	SC
21	A062Y338	AVR MX322	1	Yes	A	SC
21	E000-23212/1P	AVR MX321	1	Yes	A	SC

Item	Part No.	Description	Qty.	Recommended Service Part	RSL Class	RSL Type
21	E000-23215/1P	AVR MX321 UL	1	Yes	A	SC
21	E000-23408/1P	AVR MX341 UL	1	Yes	A	SC
21	E000-23412/1P	AVR MX341	1	Yes	A	SC
21	E000-24403/1P	AVR AS440	1	Yes	A	SC
21	E000-24408/1P	AVR AS440 UL Approved	1	Yes	A	SC
22	450-15489	Auxiliary Terminal Board	2	-	-	-
23	A053M957	Heater 110-125 V UL Cert.	1	-	-	-
23	A053M965	Heater 220-260 V UL Cert.	1	-	-	-
23	A053X245	Heater Kit 110-125 V To Include Term Box For Retro UL Cert	1	-	-	-
23	A053X247	Heater 220-260 V To Include Term Box For Retro UL Cert	1	-	-	-
24	45-0024	Terminal Box For Heaters	1	-	-	-
25	410-10781	DE Bracket From (12/09/04)	1	-	-	-
26	458-10260	DE Bracket Screen	2	-	-	-
27	45-0653	DE Louvre	1	-	-	-
28	410-10708	DE Bearing Cap Outer From (18/08/00)	1	-	-	-
29	45-0319	DE Bearing Kit From (18/08/00)	1	Yes	B	M
30	410-10706	DE Bearing Cap Outer From (18/08/00)	1	-	-	-
31	45-0675	2 Bearing Adaptor Kit (SAE 0)	1	-	-	-
31	45-0676	2 Bearing Adaptor Kit (SAE 1)	1	-	-	-
31	45-0677	2 Bearing Adaptor Kit (SAE 0.5)	1	-	-	-
31	45-0910	2 Bearing Adaptor Kit (DIN 1)	1	-	-	-
32	INCLUDED IN ITEM 31	DE Cover Screen (Included In Kits)	2	-	-	-
33	A056D894	Bracket, Foot, F4	1	-	-	-
33	A056V555	Bar, Foot, F4	2	-	-	-
33	A056V557	Bar, Foot, F4	2	-	-	-

 Copyright © 2025 Cummins Inc.

This page is intentionally blank.

20 S4 (G) One Bearing (Dedicated) Alternator

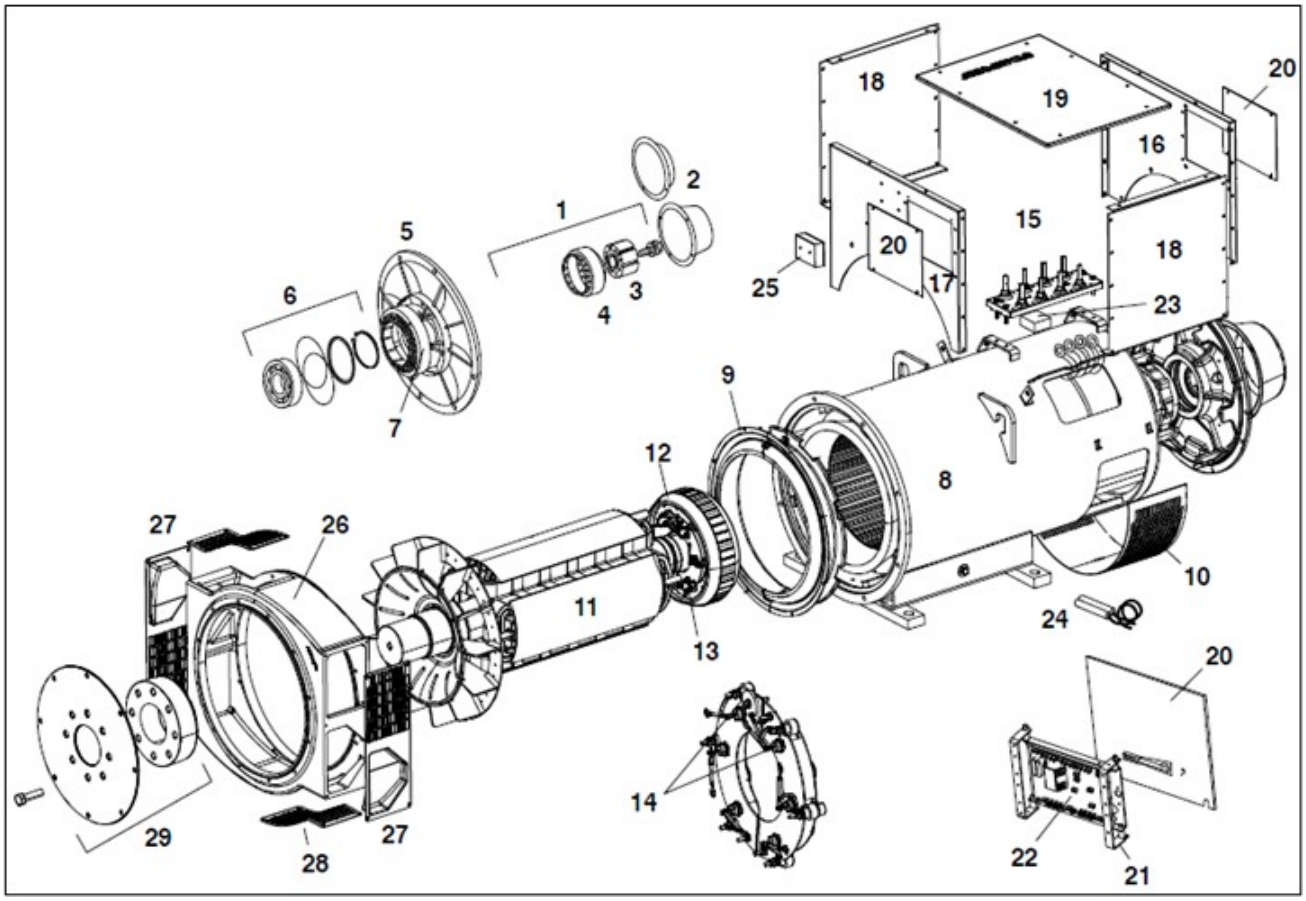

FIGURE 19. S4 (G) ONE BEARING (DEDICATED) ALTERNATOR PARTS DRAWING

TABLE 20. S4 (G) ONE BEARING (DEDICATED) ALTERNATOR PARTS LIST

Item	Part No.	Description	Qty.	Recommended Service Part	RSL Class	RSL Type
1	45-0318A	Complete PMG Upfit Kit	1	Yes	B	SC
2	410-10704	PMG Cover Only Included In Item 1	1	-	-	-
2	410-10705	Non PMG Cover (From 18/08/00)	1	-	-	-
3	45-1082	PMG Rotor/Stator Repair Kit	1	Yes	A	SC
4	45-1082	PMG Rotor/Stator Repair Kit	1	Yes	A	SC
5	410-10703	NDE Bracket From (02/2000)	1	-	-	-
6	45-0320	NDE Bearing Kit (Sealed) From (30/09/00)	1	Yes	B	M
7	410-1052	Exciter Stator 50 mm	1	Yes	A	SC
7	A052D639	Exciter Stator 50 mm Severe Environmental	1	Yes	A	SC

 Copyright © 2025 Cummins Inc.

Item	Part No.	Description	Qty.	Recommended Service Part	RSL Class	RSL Type
8	QMSN	Main Stator Frame Assembly	1	-	-	-
9	A054S342	Air Flow Baffle (G)	2	Yes	A	SC
10	410-10799	NDE Air Inlet Cover (Industrial)	1	-	-	-
10	458-20200	NDE Air Inlet Cover (Louvred)	1	-	-	-
10	458-20400	NDE Air Inlet Cover (Air Filter)	1	-	-	-
11	QMSN	Main Rotor Assembly	1	-	-	-
12	410-1194	Exciter Rotor 50 mm From (22/11/99)	1	Yes	A	SC
13	450-16016	Rotating Rectifier Assembly	1	Yes	A	SC
14	RSK-5001	Diode Forward/Reverse And Varistor Kit	1	Yes	A	SC
15	410-10720	Main Terminal Board	1	-	-	-
16	410-10785	Terminal Box End Panel NDE From (21/07/02)	1	-	-	-
16	410-10790	Terminal Box End Panel NDE Reconstructable 410-10790	1	-	-	-
16	410-10872	Terminal Box End Panel NDE From (EU Machine Dir.)	1	-	-	-
17	410-10784	Terminal Box End Panel DE From (21/07/02)	1	-	-	-
17	410-10789	Terminal Box End Panel NDE Reconstructable	1	-	-	-
17	410-10871	Terminal Box End Panel DE From (EU Machine Dir.)	1	-	-	-
18	410-10786	Terminal Box Side Panel From (21/07/98)	2	-	-	-
18	410-10788	Terminal Box Side Panel (Gland-Plate)	2	-	-	-
18	410-10803	Terminal Box Side Panel (Air Filter)	2	-	-	-
18	410-10819	Terminal Box Side Panel (AVR/PFC Right Hand)	1	-	-	-
18	410-10859	Terminal Box Side Panel (Air Filter) (EU Machine Dir.)	2	-	-	-
18	410-10873	Terminal Box Side Panel (AVR/PFC Right Hand) (EU Machine Dir.)	1	-	-	-
19	450-16417	AVR Cover (EU Machine Dir. No Mounting Bracket) X 1	1	-	-	-

Item	Part No.	Description	Qty.	Recommended Service Part	RSL Class	RSL Type
20	450-15254	AVR Cover Plate (Access)	1	-	-	-
21	45-0742	AVR Mounting Bracket	1	-	-	-
22	A060B914	AVR DECS-150	1	Yes	A	SC
22	A062Y338	AVR MX322	1	Yes	A	SC
22	E000-23212/1P	AVR MX321	1	Yes	A	SC
22	E000-23215/1P	AVR MX321 UL	1	Yes	A	SC
22	E000-23408/1P	AVR MX341 UL	1	Yes	A	SC
22	E000-23412/1P	AVR MX341	1	Yes	A	SC
22	E000-24403/1P	AVR AS440	1	Yes	A	SC
22	E000-24408/1P	AVR AS440 UL Approved	1	Yes	A	SC
23	450-15489	Auxiliary Terminal Board	2	-	-	-
24	A053M957	Heater 110-125 V UL Cert.	1	-	-	-
24	A053X245	Heater Kit 110-125 V To Include Term Box For Retro UL Cert	1	-	-	-

 Copyright © 2025 Cummins Inc.

This page is intentionally blank.

21 HC534 (C-F) One Bearing (Ser 3-4) Alternator

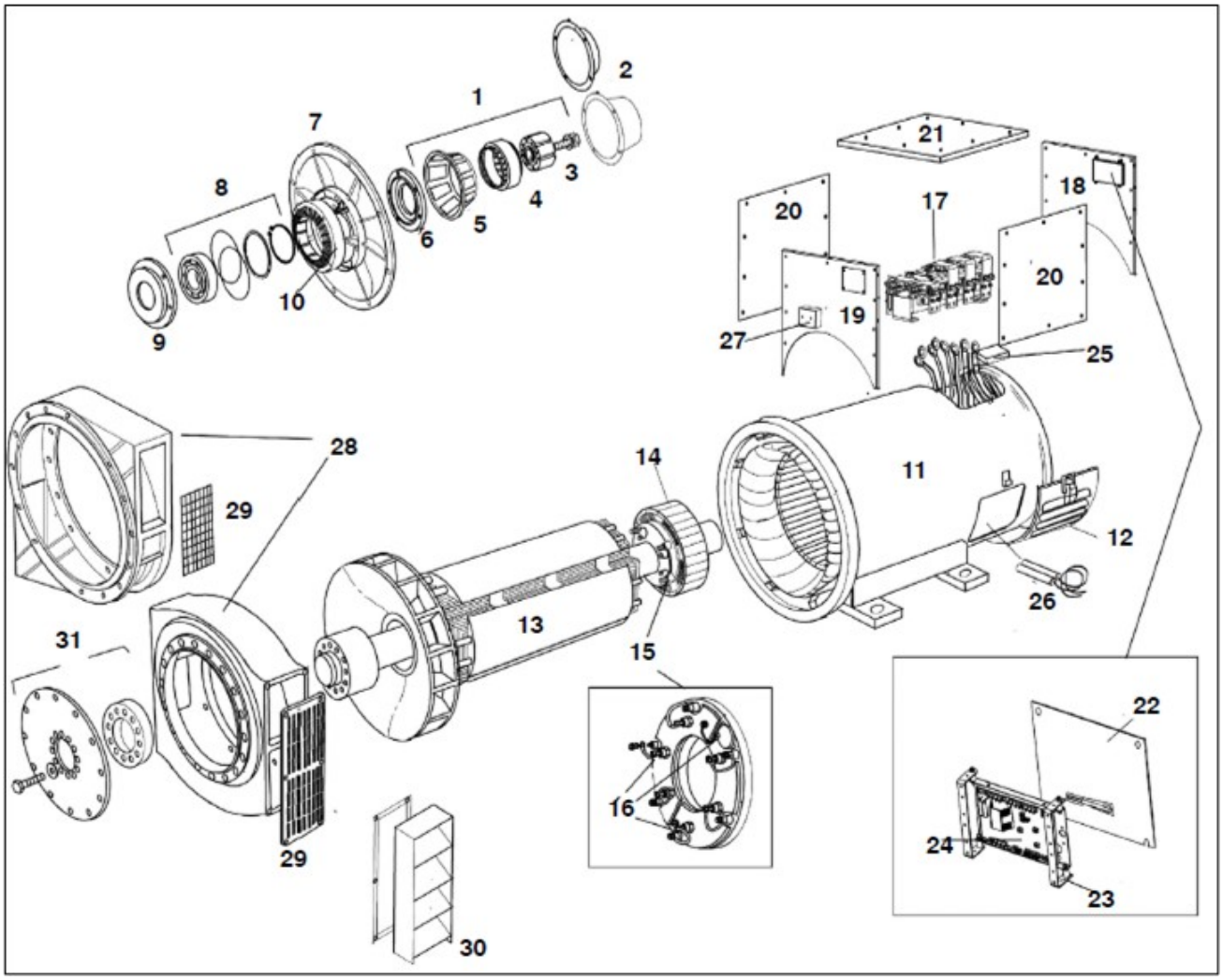

FIGURE 20. HC534 (C-F) ONE BEARING (SER 3-4) ALTERNATOR PARTS DRAWING

TABLE 21. HC534 (C-F) ONE BEARING (SER 3-4) ALTERNATOR PARTS LIST

Item	Part No.	Description	Qty.	Recommended Service Part	RSL Class	RSL Type
1	45-0328A	Complete PMG Upfit Kit	1	Yes	B	SC
1	45-0059A	Complete PMG Upfit Kit (To 18/08/00) (Obsolete)	1	-	-	-
2	410-10704	PMG Cover Only Included In Item 2	1	-	-	-
2	410-10705	Non PMG Cover (From 18/08/00)	1	-	-	-
2	450-12590	Non PMG Cover (To 18/08/00)	1	-	-	-

 Copyright © 2025 Cummins Inc.

Item	Part No.	Description	Qty.	Recommended Service Part	RSL Class	RSL Type
2	450-13350	PMG Cover Only Included In Kit 45-0059a	1	-	-	-
3	45-1082	PMG Rotor/Stator Repair Kit	1	Yes	A	SC
4	45-1082	PMG Rotor/Stator Repair Kit	1	Yes	A	SC
5	SEE NO. 1	PMG Crown (If Fitted)	1	-	-	-
6	410-10268	NDE Bearing Cap To (30/09/00)	1	-	-	-
6	520-10812	NDE Bearing Cap (Regreasable Bearing)	1	-	-	-
7	520-10306	NDE Bracket To (30/09/00)	1	-	-	-
7	520-10780	NDE Bracket From (30/09/00)	1	-	-	-
7	520-10810	NDE Bracket (Regreasable Bearing)	1	-	-	-
8	45-0320	NDE Bearing Kit (Sealed) From (30/09/00)	1	Yes	B	M
8	45-1099	NDE Bearing Kit (Regreasable)	1	Yes	B	SC
8	45-0291	NDE Bearing Kit (Sealed) To (30/09/00)	1	Yes	B	M
9	458-12960	NDE Bearing Cartridge To (20/09/2000)	1	-	-	-
9	520-10811	NDE Bearing Cartridge From (20/09/2000)	1	-	-	-
10	410-1052	Exciter Stator 50 mm	1	Yes	A	SC
10	520-10286	Exciter Stator 65 mm	1	Yes	A	SC
10	A052D639	Exciter Stator 50 mm Severe Environmental	1	Yes	A	SC
10	A052D940	Exciter Stator 65 mm Severe Environmental	1	Yes	A	SC
11	QMSN	Main Stator Frame Assembly	1	-	-	-
12	462-20100	NDE Air Inlet Cover (Louvred)	1	-	-	-
12	520-10933	NDE Air Inlet Cover (Industrial)	1	-	-	-
13	QMSN	Main Rotor Assembly	1	-	-	-
14	520-1142	Exciter Rotor 65 mm To Fit Internal Bore Diameter 110 mm	1	Yes	A	SC
15	450-16016	Rotating Rectifier Assembly	1	Yes	A	SC
16	RSK-5001	Diode Forward/Reverse And Varistor Kit	1	Yes	A	SC

Item	Part No.	Description	Qty.	Recommended Service Part	RSL Class	RSL Type
17	QMSN	Main Terminal Board	1	-	-	-
18	520-10153	Terminal Box End Panel NDE To (08/1998)	1	-	-	-
18	520-10534	Terminal Box End Panel NDE To (19//09/1998)	1	-	-	-
18	520-10907	Terminal Box End Panel NDE From (20/09/1998)	1	-	-	-
18	520-10911	Terminal Box End Panel NDE (Reverse Entry)	1	-	-	-
18	520-10914	Terminal Box End Panel NDE (Reconnectable)	1	-	-	-
18	520-10917	Terminal Box End Panel NDE (High Box)	1	-	-	-
18	520-10918	Terminal Box End Panel NDE (PG Gland)	1	-	-	-
18	520-10920	Terminal Box End Panel NDE (Railway App)	1	-	-	-
18	520-10982	Terminal Box End Panel NDE (To Fit AVR DM110)	1	-	-	-
18	520-11026	Terminal Box End Panel NDE (EU Machine Dir.)	1	-	-	-
18	520-11028	Terminal Box End Panel NDE (Reverse Entry) (EU Machine Dir.)	1	-	-	-
18	520-11030	Terminal Box End Panel NDE (High Box) (EU Machine Dir.)	1	-	-	-
18	520-11032	Terminal Box End Panel NDE (PG Gland) (EU Machine Dir.)	1	-	-	-
18	520-11033	Terminal Box End Panel NDE (Railway App) (EU Machine Dir.)	1	-	-	-
19	520-10181	Terminal Box End Panel DE to (08/1998)	1	-	-	-
19	520-10906	Terminal Box End Panel DE From (08/1998)	1	-	-	-
19	520-10910	Terminal Box End Panel DE (Reverse Entry)	1	-	-	-
19	520-10913	Terminal Box End Panel DE (Reconnectable)	1	-	-	-
19	520-10916	Terminal Box End Panel DE (High Box)	1	-	-	-
19	520-11025	Terminal Box End Panel DE From (EU Machine Dir.)	1	-	-	-

 Copyright © 2025 Cummins Inc.

Item	Part No.	Description	Qty.	Recommended Service Part	RSL Class	RSL Type
19	520-11027	Terminal Box End Panel DE (Reverse Entry) (EU Machine Dir.)	1	-	-	-
19	520-11029	Terminal Box End Panel DE (High Box) (EU Machine Dir.)	1	-	-	-
20	462-11880	Terminal Box Side Panel To (08/1998)	2	-	-	-
20	520-10908	Terminal Box Side Panel From (08/1998)	2	-	-	-
20	520-10909	Terminal Box Side Panel (Air Filters) From (08/1998)	2	-	-	-
20	520-10912	Terminal Box Side Panel (PF Control Diff)	1	-	-	-
20	520-10921	Terminal Box Side Panel (Railway App)	2	-	-	-
20	520-11015	Terminal Box Side Panel (Reconnectable/Air Filters) (EU Machine Dir.)	2	-	-	-
20	520-11031	Terminal Box Side Panel (Railway App) (EU Machine Dir.)	2	-	-	-
21	462-11840	Terminal Box Lid To (08/1998)	1	-	-	-
21	520-10536	Terminal Box Lid From (08/1998)	1	-	-	-
22	450-14310	AVR Cover Plate	1	-	-	-
22	450-16413	AVR Plastic Cover (EU Machine Dir.)	1	-	-	-
22	450-16417	AVR Cover Plate (Access) (EU Machine Dir.)	1	-	-	-
23	45-0742	AVR Mounting Bracket	1	-	-	-
24	A062Y338	AVR MX322	1	-	-	-
24	E000-24210/1P	AVR SX421	1	-	-	-
24	A060B914	AVR DECS-150	1	Yes	A	SC
24	E000-23212/1P	AVR MX321	1	Yes	A	SC
24	E000-23215/1P	AVR MX321 UL	1	Yes	A	SC
24	E000-23408/1P	AVR MX341 UL	1	Yes	A	SC
24	E000-23412/1P	AVR MX341	1	Yes	A	SC
24	E000-24403/1P	AVR AS440	1	Yes	A	SC
24	E000-24408/1P	AVR AS440 UL Approved	1	Yes	A	SC
25	450-15489	Auxiliary Terminal Board	2	-	-	-
26	A053M968	Heater 110-125 V UL Cert	1	-	-	-

Item	Part No.	Description	Qty.	Recommended Service Part	RSL Class	RSL Type
26	A053N002	Heater 220-260 V UL Cert	1	-	-	-
26	A053X252	Heater Kit 110-125 V To Include Term Box For Retro UL Cert	1	-	-	-
26	A053X255	Heater Kit 220-260 V To Include Term Box For Retro UL Cert	1	-	-	-
27	45-0024	Terminal Box For Heaters	1	-	-	-
28	45-0666	DE Adaptor Kit SAE 00	1	-	-	-
28	45-0667	DE Adaptor Kit SAE 0	1	-	-	-
28	45-0668	DE Adaptor Kit SAE 0.5	1	-	-	-
28	45-0669	DE Adaptor Kit SAE 1	1	-	-	-
28	45-0802	DE Adaptor Kit (SAE 1 Round)	1	-	-	-
28	45-0917	DE Adaptor Kit (SAE 1 Round/Heavy Duty)	1	-	-	-
28	A051Y674	DE Adaptor Kit (SAE 0 Round/Heavy Duty)	1	-	-	-
29	SEE NO. 28	DE Screen (Included In Adaptor Kits)	2	-	-	-
30	45-0654	DE Louvre SAE 00	1	-	-	-
30	45-0655	DE Louvre SAE 0 And 0.5 And 1	1	-	-	-
31	45-0780	Coupling Kit SAE 14	1	-	-	-
31	45-0781	Coupling Kit SAE 18	1	-	-	-
31	45-0782	Coupling Kit SAE 21	1	-	-	-
31	45-0783	Coupling Kit SAE 17.75	1	-	-	-

 Copyright © 2025 Cummins Inc.

This page is intentionally blank.

22 HC534 (C-F) Two Bearing (Ser 3-4) Alternator

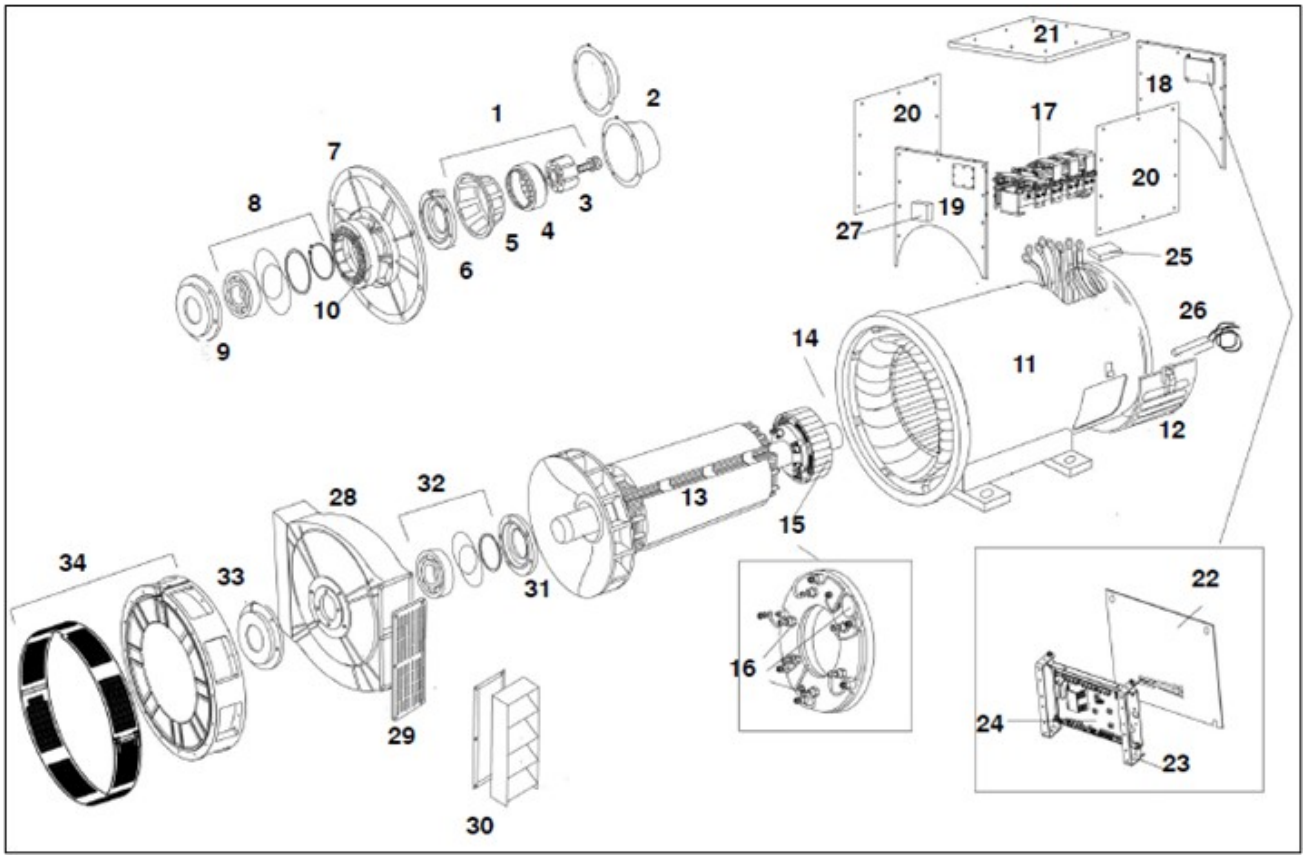

FIGURE 21. HC534 (C-F) TWO BEARING (SER 3-4) ALTERNATOR PARTS DRAWING

TABLE 22. HC534 (C-F) TWO BEARING (SER 3-4) ALTERNATOR PARTS LIST

Item	Part No.	Description	Qty.	Recommended Service Part	RSL Class	RSL Type
1	45-0328A	Complete PMG Upfit Kit	1	Yes	B	SC
1	45-0060A	Complete PMG Upfit Kit (To 18/08/00) (Obsolete)	1	-	-	-
2	410-10704	PMG Cover Only Included In Item 1	1	-	-	-
2	410-10705	Non PMG Cover (From 18/08/00)	1	-	-	-
2	450-12590	Non PMG Cover (To 18/08/00)	1	-	-	-
2	450-13350	PMG Cover Only Included In Kit 45-0059a	1	-	-	-
3	45-1082	PMG Rotor/Stator Repair Kit	1	Yes	A	SC
4	45-1082	PMG Rotor/Stator Repair Kit	1	Yes	A	SC
5	SEE NO. 1	PMG Crown (If Fitted)	1	-	-	-

 Copyright © 2025 Cummins Inc.

Item	Part No.	Description	Qty.	Recommended Service Part	RSL Class	RSL Type
6	410-10267	NDE Bearing Cap To (30/09/00)	6	-	-	-
6	520-10812	NDE Bearing Cap (Regreasable Bearing)	1	-	-	-
7	520-10306	NDE Bracket To (30/09/00)	1	-	-	-
7	520-10780	NDE Bracket From (30/09/00)	1	-	-	-
7	520-10810	NDE Bracket (Regreasable Bearing)	1	-	-	-
8	45-0320	NDE Bearing Kit (Sealed) From (30/09/00)	1	Yes	B	M
8	45-0291	NDE Bearing Kit (Sealed) To (30/09/00)	1	Yes	B	M
9	458-10110	NDE Bearing Cartridge To (20/09/2000)	1	-	-	-
9	520-10811	NDE Bearing Cartridge From (20/09/2000)	1	-	-	-
10	410-1052	Exciter Stator 50 mm	1	Yes	A	SC
10	520-10286	Exciter Stator 65 mm	1	Yes	A	SC
10	A052D639	Exciter Stator 50 mm Severe Environmental	1	Yes	A	SC
10	A052D940	Exciter Stator 65 mm Severe Environmental	1	Yes	A	SC
11	QMSN	Main Stator Frame Assembly	1	-	-	-
12	462-20100	NDE Air Inlet Cover (Louvred)	1	-	-	-
12	520-10933	NDE Air Inlet Cover (Industrial)	1	-	-	-
13	QMSN	Main Rotor Assembly	1	-	-	-
14	520-1142	Exciter Rotor 65 mm To Fit Internal Bore Diameter 110 mm	1	Yes	A	SC
15	450-16016	Rotating Rectifier Assembly	1	Yes	A	SC
16	RSK-5001	Diode Forward/Reverse And Varistor Kit	1	Yes	A	SC
17	QMSN	Main Terminal Board	1	-	-	-
18	520-10153	Terminal Box End Panel NDE To (08/1998)	1	-	-	-
18	520-10534	Terminal Box End Panel NDE To (19//09/1998)	1	-	-	-
18	520-10907	Terminal Box End Panel NDE From (20/09/1998)	1	-	-	-

Copyright © 2025 Cummins Inc.

Item	Part No.	Description	Qty.	Recommended Service Part	RSL Class	RSL Type
18	520-10911	Terminal Box End Panel NDE (Reverse Entry)	1	-	-	-
18	520-10914	Terminal Box End Panel NDE (Reconnectable)	1	-	-	-
18	520-10917	Terminal Box End Panel NDE (High Box)	1	-	-	-
18	520-10918	Terminal Box End Panel NDE (PG Gland)	1	-	-	-
18	520-10920	Terminal Box End Panel NDE (Railway App)	1	-	-	-
18	520-10982	Terminal Box End Panel NDE (To Fit AVR DM110)	1	-	-	-
18	520-11026	Terminal Box End Panel NDE (EU Machine Dir.)	1	-	-	-
18	520-11028	Terminal Box End Panel NDE (Reverse Entry) (EU Machine Dir.)	1	-	-	-
18	520-11030	Terminal Box End Panel NDE (High Box) (EU Machine Dir.)	1	-	-	-
18	520-11032	Terminal Box End Panel NDE (PG Gland) (EU Machine Dir.)	1	-	-	-
18	520-11033	Terminal Box End Panel NDE (Railway App) (EU Machine Dir.)	1	-	-	-
19	520-10181	Terminal Box End Panel DE to (08/1998)	1	-	-	-
19	520-10906	Terminal Box End Panel DE From (08/1998)	1	-	-	-
19	520-10910	Terminal Box End Panel DE (Reverse Entry)	1	-	-	-
19	520-10913	Terminal Box End Panel DE (Reconnectable)	1	-	-	-
19	520-10916	Terminal Box End Panel DE (High Box)	1	-	-	-
19	520-11025	Terminal Box End Panel DE From (EU Machine Dir.)	1	-	-	-
19	520-11027	Terminal Box End Panel DE (Reverse Entry) (EU Machine Dir.)	1	-	-	-
19	520-11029	Terminal Box End Panel DE (High Box) (EU Machine Dir.)	1	-	-	-
20	462-11880	Terminal Box Side Panel To (08/1998)	2	-	-	-

 Copyright © 2025 Cummins Inc.

Item	Part No.	Description	Qty.	Recommended Service Part	RSL Class	RSL Type
20	520-10908	Terminal Box Side Panel From (08/1998)	2	-	-	-
20	520-10909	Terminal Box Side Panel (Air Filters) From (08/1998)	2	-	-	-
20	520-10912	Terminal Box Side Panel (PF Control Diff)	1	-	-	-
20	520-10921	Terminal Box Side Panel (Railway App)	2	-	-	-
20	520-11015	Terminal Box Side Panel (Reconnectable/Air Filters) (EU Machine Dir.)	2	-	-	-
20	520-11031	Terminal Box Side Panel (Railway App) (EU Machine Dir.)	2	-	-	-
21	462-11840	Terminal Box Lid To (08/1998)	1	-	-	-
21	520-10536	Terminal Box Lid From (08/1998)	1	-	-	-
22	450-14310	AVR Cover Plate	1	-	-	-
22	450-16413	AVR Cover (EU Machine Dir.) (Where AVR Fitted)	1	-	-	-
22	450-16417	AVR Cover (EU Machine Dir. No Mounting Bracket) X 1	1	-	-	-
23	45-0742	AVR Mounting Bracket	1	-	-	-
24	A060B914	AVR DECS-150	1	Yes	A	SC
24	A062Y338	AVR MX322	1	Yes	A	SC
24	E000-23212/1P	AVR MX321	1	Yes	A	SC
24	E000-23215/1P	AVR MX321 UL	1	Yes	A	SC
24	E000-23408/1P	AVR MX341 UL	1	Yes	A	SC
24	E000-23412/1P	AVR MX341	1	Yes	A	SC
24	E000-24210/1P	AVR SX421	1	Yes	A	SC
24	E000-24403/1P	AVR AS440	1	Yes	A	SC
24	E000-24408/1P	AVR AS440 UL Approved	1	Yes	A	SC
25	450-15489	Auxiliary Terminal Board	2	-	-	-
26	A053M968	Heater 110-125 V UL Cert	1	-	-	-
26	A053N002	Heater 220-260 V UL Cert	1	-	-	-
26	A053X252	Heater Kit 110-125 V To Include Term Box For Retro UL Cert	1	-	-	-
26	A053X255	Heater Kit 220-260 V To Include Term Box For Retro UL Cert	1	-	-	-

Item	Part No.	Description	Qty.	Recommended Service Part	RSL Class	RSL Type
27	45-0024	Terminal Box For Heaters	1	-	-	-
28	462-11170	DE Bracket To (29/09/2000)	1	-	-	-
28	520-10557	DE Bracket From (29/09/2000)	1	-	-	-
29	462-10260	DE Bracket Screen	2	-	-	-
30	45-0656	DE Louvre Kit	2	-	-	-
31	462-10130	DE Bearing Cartridge To (30/09/2000)	1	-	-	-
31	520-10776	DE Bearing Cartridge From (30/09/2000)	1	-	-	-
31	520-10816	DE Bearing Cartridge (Regrease)	1	-	-	-
32	45-1100	DE Bearing Kit (Regrease)	1	Yes	B	M
32	45-0292	DE Bearing Kit (Sealed) To (30/09/2000)	1	Yes	B	M
32	45-0321	DE Bearing Kit (Sealed) From (30/09/2000)	1	Yes	B	M
33	520-10333	DE Bearing Cap Outer To (30/09/2000)	1	-	-	-
33	520-10778	DE Bearing Cap Outer From (30/09/2000)	1	-	-	-
33	520-10818	DE Bearing Cap (Regrease)	1	-	-	-
34	45-0678	2 Bearing Adaptor Kit SAE 00	1	-	-	-
34	45-0679	2 Bearing Adaptor Kit SAE 0	1	-	-	-
34	45-0680	2 Bearing Adaptor Kit SAE 0.5	1	-	-	-
34	45-0681	2 Bearing Adaptor Kit SAE 1	1	-	-	-
34	45-0808	2 Bearing Adaptor Kit SAE 1 DIN	1	-	-	-
34	45-0932	2 Bearing Adaptor Kit SAE 0 DIN	1	-	-	-
35	INCLUDED IN 34	DE Cover Screen (Included In Kits)	1	-	-	-
Not Shown	45-0281	Kluber Grease 400g	1	Yes	B	M
-	-	**NOTE:− Regrease option is not retrofittable**	-	-	-	-

 Copyright © 2025 Cummins Inc.

This page is intentionally blank.

23 S5 (C-F) One Bearing (Dedicated) Alternator

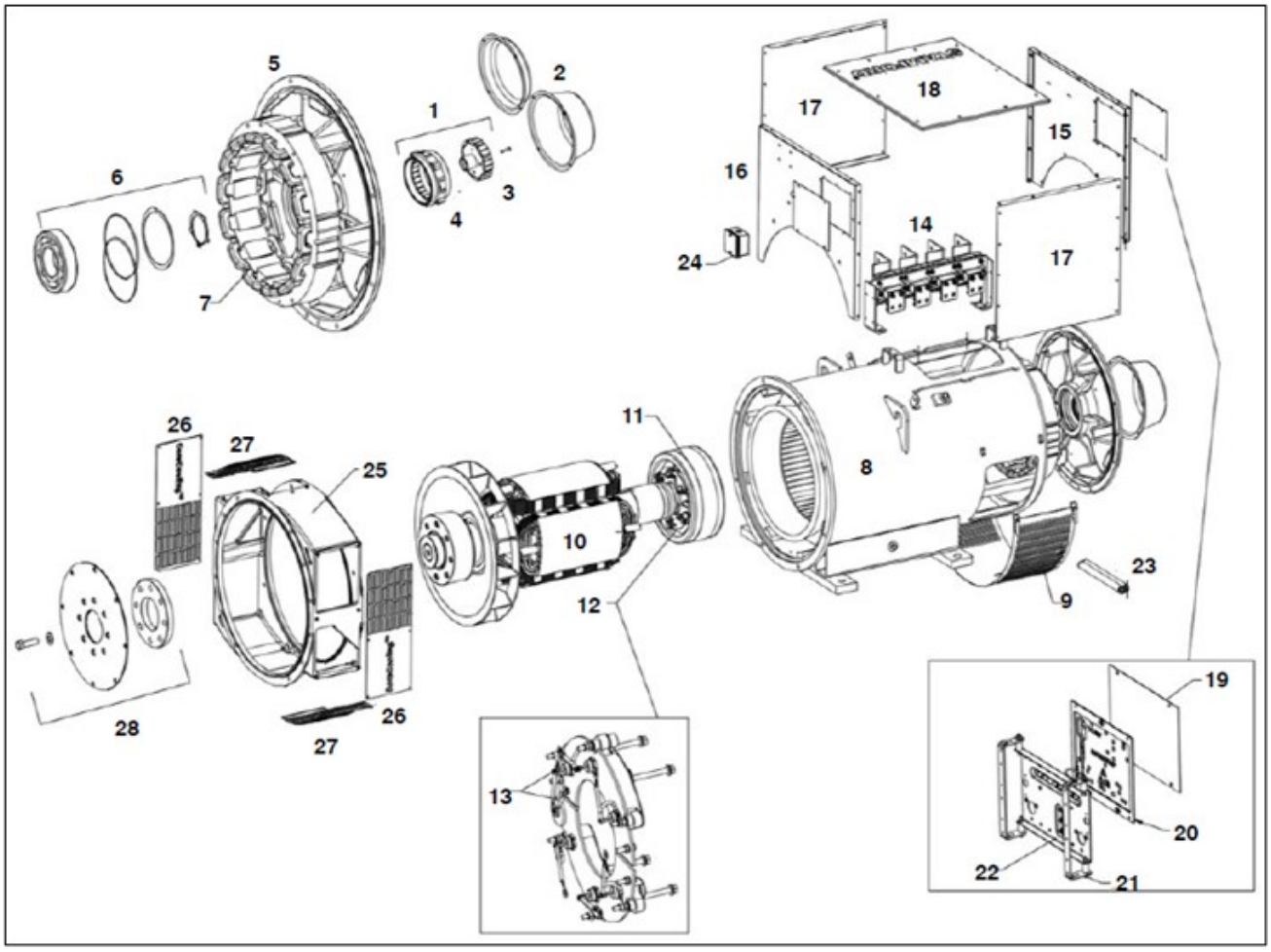

FIGURE 22. S5 (C-F) ONE BEARING (DEDICATED) ALTERNATOR PARTS DRAWING

TABLE 23. S5 (C-F) ONE BEARING (DEDICATED) ALTERNATOR PARTS LIST

Item	Part No.	Description	Qty.	Recommended Service Part	RSL Class	RSL Type
1	45-0328A	Complete PMG Upfit Kit	1	Yes	B	SC
2	410-10704	PMG Cover Only Included In Item 1	1	-	-	-
2	410-10705	Non PMG Cover (From 18/08/00)	1	-	-	-
3	45-1082	PMG Rotor/Stator Repair Kit	1	Yes	A	SC
4	45-1082	PMG Rotor/Stator Repair Kit	1	Yes	A	SC
5	520-10780	NDE Bracket From (30/09/00)	1	-	-	-
6	45-0320	NDE Bearing Kit (Sealed) From (30/09/00)	1	Yes	B	M

 Copyright © 2025 Cummins Inc.

Item	Part No.	Description	Qty.	Recommended Service Part	RSL Class	RSL Type
7	520-10286	Exciter Stator 65 mm	1	Yes	A	SC
7	A052D940	Exciter Stator 65 mm Severe Environmental	1	Yes	A	SC
8	QMSN	Main Stator Frame Assembly	1	-	-	-
9	520-10933	NDE Air Inlet Cover (Industrial)	1	-	-	-
10	QMSN	Main Rotor Assembly	1	-	-	-
11	520-1142	Exciter Rotor 65 mm To Fit Internal Bore Diameter 110 mm	1	Yes	A	SC
12	450-16016	Rotating Rectifier Assembly	1	Yes	A	SC
13	RSK-5001	Diode Forward/Reverse And Varistor Kit	1	Yes	A	SC
14	QMSN	Main Terminal Board	1	-	-	-
15	520-10907	Terminal Box End Panel NDE From (20/09/1998)	1	-	-	-
15	520-10911	Terminal Box End Panel NDE (Reverse Entry)	1	-	-	-
15	520-10914	Terminal Box End Panel NDE (Reconnectable)	1	-	-	-
15	520-10917	Terminal Box End Panel NDE (High Box)	1	-	-	-
15	520-10918	Terminal Box End Panel NDE (PG Gland)	1	-	-	-
15	520-10920	Terminal Box End Panel NDE (Railway App)	1	-	-	-
15	520-10982	Terminal Box End Panel NDE (To Fit AVR DM110)	1	-	-	-
15	520-11026	Terminal Box End Panel NDE (EU Machine Dir.)	1	-	-	-
15	520-11028	Terminal Box End Panel NDE (Reverse Entry) (EU Machine Dir.)	1	-	-	-
15	520-11030	Terminal Box End Panel NDE (High Box) (EU Machine Dir.)	1	-	-	-
15	520-11032	Terminal Box End Panel NDE (PG Gland) (EU Machine Dir.)	1	-	-	-
15	520-11033	Terminal Box End Panel NDE (Railway App) (EU Machine Dir.)	1	-	-	-
16	520-10906	Terminal Box End Panel DE From (08/1998)	1	-	-	-

Copyright © 2025 Cummins Inc.

Item	Part No.	Description	Qty.	Recommended Service Part	RSL Class	RSL Type
16	520-10910	Terminal Box End Panel DE (Reverse Entry)	1	-	-	-
16	520-10913	Terminal Box End Panel DE (Reconnectable)	1	-	-	-
16	520-10916	Terminal Box End Panel DE (High Box)	1	-	-	-
16	520-11025	Terminal Box End Panel DE From (EU Machine Dir.)	1	-	-	-
16	520-11027	Terminal Box End Panel DE (Reverse Entry) (EU Machine Dir.)	1	-	-	-
16	520-11029	Terminal Box End Panel DE (High Box) (EU Machine Dir.)	1	-	-	-
17	520-10908	Terminal Box Side Panel From (08/1998)	2	-	-	-
17	520-10909	Terminal Box Side Panel (Air Filters) From (08/1998)	2	-	-	-
17	520-10912	Terminal Box Side Panel (PF Control Diff)	1	-	-	-
17	520-10921	Terminal Box Side Panel (Railway App)	2	-	-	-
17	520-11015	Terminal Box Side Panel (Reconnectable/Air Filters) (EU Machine Dir.)	2	-	-	-
17	520-11031	Terminal Box Side Panel (Railway App) (EU Machine Dir.)	2	-	-	-
18	520-10536	Terminal Box Lid From (08/1998)	1	-	-	-
19	450-16414	AVR Cover (Where AVR Fitted)	1	-	-	-
19	450-16417	AVR Cover (EU Machine Dir. No Mounting Bracket) X 1	1	-	-	-
20	450-16413	AVR Cover (EU Machine Dir.) (Where AVR Fitted)	1	-	-	-
21	45-0742	AVR Mounting Bracket	1	-	-	-
22	A060B914	AVR DECS-150	1	Yes	A	SC
22	A062Y338	AVR MX322	1	Yes	A	SC
22	E000-23212/1P	AVR MX321	1	Yes	A	SC
22	E000-23215/1P	AVR MX321 UL	1	Yes	A	SC
22	E000-23408/1P	AVR MX341 UL	1	Yes	A	SC
22	E000-23412/1P	AVR MX341	1	Yes	A	SC
22	E000-24403/1P	AVR AS440	1	Yes	A	SC

 Copyright © 2025 Cummins Inc.

Item	Part No.	Description	Qty.	Recommended Service Part	RSL Class	RSL Type
22	E000-24408/1P	AVR AS440 UL Approved	1	Yes	A	SC
23	A053M968	Heater 110-125 V UL Cert	1	-	-	-
23	A053N002	Heater 220-260 V UL Cert	1	-	-	-
23	A053X252	Heater Kit 110-125 V To Include Term Box For Retro UL Cert	1	-	-	-
23	A053X255	Heater Kit 220-260 V To Include Term Box For Retro UL Cert	1	-	-	-
24	45-0024	Terminal Box For Heaters	1	-	-	-
25	A062E101	Adaptor SAE 0 Kit (S5 Dedicated C-F)	1	-	-	-
25	A062E113	Adaptor SAE 0.5 Kit (S5 Dedicated C-F)	1	-	-	-
25	A062E117	Adaptor SAE 1 Kit (S5 Dedicated C-F)	1	-	-	-
25	A062E120	Adaptor SAE 1 Kit (S5 Dedicated F)	1	-	-	-
26	A060M586	DE Side Screen (Included In Adaptor Kits)	2	-	-	-
27	A056F129	DE Top And Bottom Screen (Included In Adaptor Kits)	2	-	-	-
28	45-0780	Coupling Kit SAE 14	1	-	-	-
28	45-0781	Coupling Kit SAE 18	1	-	-	-
28	45-0782	Coupling Kit SAE 21	1	-	-	-
28	45-0783	Coupling Kit SAE 17.75	1	-	-	-
Not Shown	45-0281	Kluber Grease 400g	1	Yes	B	M

Copyright © 2025 Cummins Inc.

24 S5 (G-H) One Bearing (Dedicated) Alternator

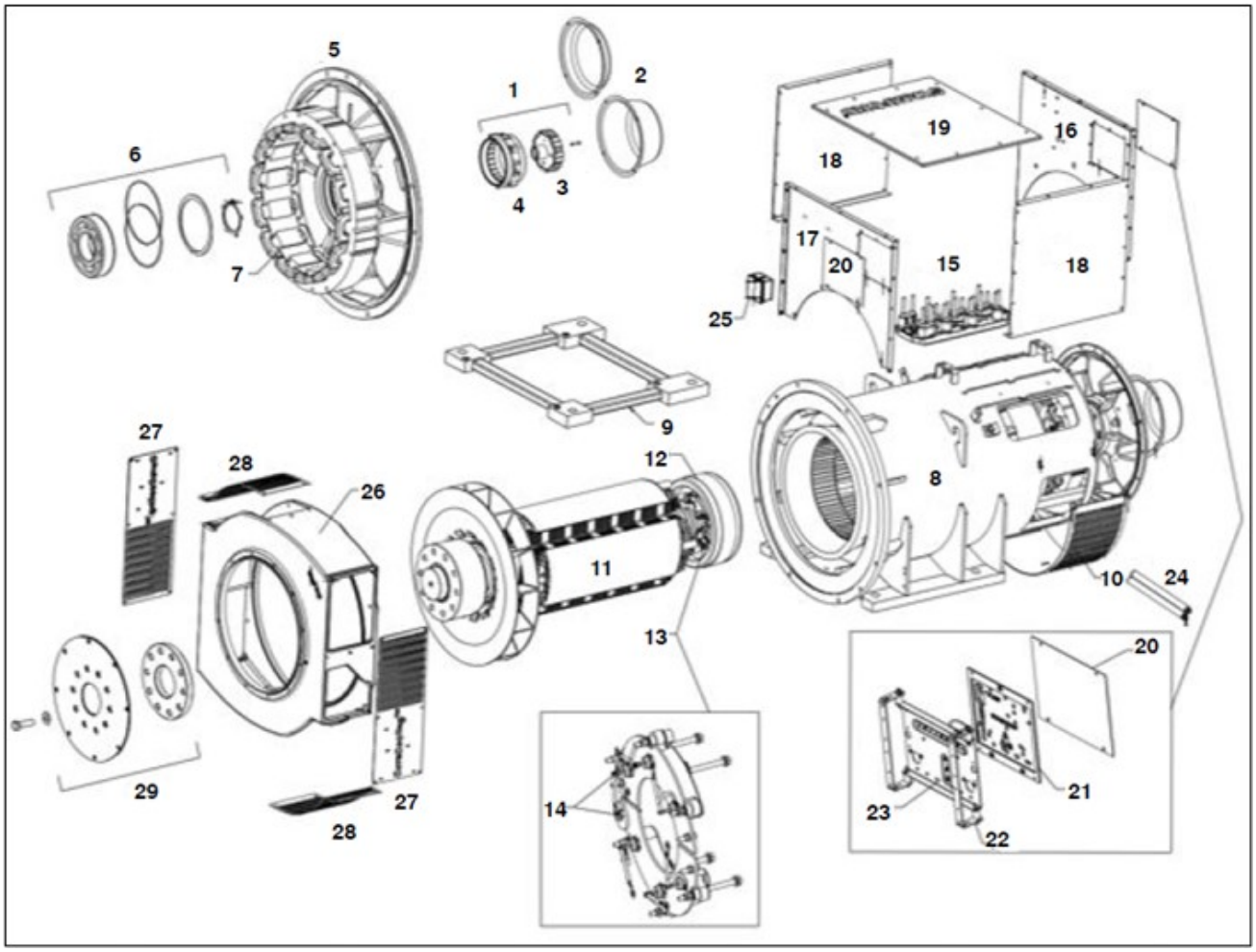

FIGURE 23. S5 (G-H) ONE BEARING (DEDICATED) ALTERNATOR PARTS DRAWING

TABLE 24. S5 (G-H) ONE BEARING (DEDICATED) ALTERNATOR PARTS LIST

Item	Part No.	Description	Qty.	Recommended Service Part	RSL Class	RSL Type
1	45-0328A	Complete PMG Upfit Kit	1	Yes	B	SC
2	410-10704	PMG Cover Only Included In Item 1	1	-	-	-
2	410-10705	Non PMG Cover (From 18/08/00)	1	-	-	-
3	45-1082	PMG Rotor/Stator Repair Kit	1	Yes	A	SC
4	45-1082	PMG Rotor/Stator Repair Kit	1	Yes	A	SC
5	520-10780	NDE Bracket From (30/09/00)	1	-	-	-
6	45-0320	NDE Bearing Kit (Sealed) From (30/09/00)	1	Yes	B	M

 Copyright © 2025 Cummins Inc.

Item	Part No.	Description	Qty.	Recommended Service Part	RSL Class	RSL Type
7	520-10286	Exciter Stator 65 mm	1	Yes	A	SC
7	A052D940	Exciter Stator 65 mm Severe Environmental	1	Yes	A	SC
8	QMSN	Main Stator Frame Assembly	1	-	-	-
9	A058G732	Foot Spacer	1	-	-	-
10	520-10933	NDE Air Inlet Cover (Industrial)	1	-	-	-
11	QMSN	Main Rotor Assembly	1	-	-	-
12	520-1142	Exciter Rotor 65 mm To Fit Internal Bore Diameter 110 mm	1	Yes	A	SC
13	450-16016	Rotating Rectifier Assembly	1	Yes	A	SC
14	RSK-5001	Diode Forward/Reverse And Varistor Kit	1	Yes	A	SC
15	QMSN	Main Terminal Board	1	-	-	-
16	520-10907	Terminal Box End Panel NDE From (20/09/1998)	1	-	-	-
16	520-10911	Terminal Box End Panel NDE (Reverse Entry)	1	-	-	-
16	520-10914	Terminal Box End Panel NDE (Reconnectable)	1	-	-	-
16	520-10917	Terminal Box End Panel NDE (High Box)	1	-	-	-
16	520-10918	Terminal Box End Panel NDE (PG Gland)	1	-	-	-
16	520-10920	Terminal Box End Panel NDE (Railway App)	1	-	-	-
16	520-10982	Terminal Box End Panel NDE (To Fit AVR DM110)	1	-	-	-
16	520-11026	Terminal Box End Panel NDE (EU Machine Dir.)	1	-	-	-
16	520-11028	Terminal Box End Panel NDE (Reverse Entry) (EU Machine Dir.)	1	-	-	-
16	520-11030	Terminal Box End Panel NDE (High Box) (EU Machine Dir.)	1	-	-	-
16	520-11032	Terminal Box End Panel NDE (PG Gland) (EU Machine Dir.)	1	-	-	-
16	520-11033	Terminal Box End Panel NDE (Railway App) (EU Machine Dir.)	1	-	-	-

Copyright © 2025 Cummins Inc.

Item	Part No.	Description	Qty.	Recommended Service Part	RSL Class	RSL Type
17	520-10906	Terminal Box End Panel DE From (08/1998)	1	-	-	-
17	520-10910	Terminal Box End Panel DE (Reverse Entry)	1	-	-	-
17	520-10913	Terminal Box End Panel DE (Reconnectable)	1	-	-	-
17	520-10916	Terminal Box End Panel DE (High Box)	1	-	-	-
17	520-11025	Terminal Box End Panel DE From (EU Machine Dir.)	1	-	-	-
17	520-11027	Terminal Box End Panel DE (Reverse Entry) (EU Machine Dir.)	1	-	-	-
17	520-11029	Terminal Box End Panel DE (High Box) (EU Machine Dir.)	1	-	-	-
18	A059B265	Terminal Box Side Panel For S5 G/H	2	-	-	-
19	520-10536	Terminal Box Lid From (08/1998)	1	-	-	-
20	450-16414	AVR Cover (Where AVR Fitted)	1	-	-	-
20	450-16417	AVR Cover (EU Machine Dir. No Mounting Bracket) X 1	1	-	-	-
21	450-16413	AVR Cover (EU Machine Dir.) (Where AVR Fitted)	1	-	-	-
22	45-0742	AVR Mounting Bracket	1	-	-	-
23	A060B914	AVR DECS-150	1	Yes	A	SC
23	A062Y338	AVR MX322	1	Yes	A	SC
23	E000-23212/1P	AVR MX321	1	Yes	A	SC
23	E000-23215/1P	AVR MX321 UL	1	Yes	A	SC
23	E000-23408/1P	AVR MX341 UL	1	Yes	A	SC
23	E000-23412/1P	AVR MX341	1	Yes	A	SC
23	E000-24403/1P	AVR AS440	1	Yes	A	SC
23	E000-24408/1P	AVR AS440 UL Approved	1	Yes	A	SC
24	A053M968	Heater 110-125 V UL Cert	1	-	-	-
24	A053N002	Heater 220-260 V UL Cert	1	-	-	-
24	A053X252	Heater Kit 110-125 V To Include Term Box For Retro UL Cert	1	-	-	-
24	A053X255	Heater Kit 220-260 V To Include Term Box For Retro UL Cert	1	-	-	-

 Copyright © 2025 Cummins Inc.

Item	Part No.	Description	Qty.	Recommended Service Part	RSL Class	RSL Type
25	45-0024	Terminal Box For Heaters	1	-	-	-
26	A062E122	Adaptor SAE 0 Kit (S5 Dedicated G-H)	1	-	-	-
26	A062E124	Adaptor SAE 0.5 Kit (S5 Dedicated G-H)	1	-	-	-
26	A062E130	Adaptor SAE 1 Kit (S5 Dedicated G-H)	1	-	-	-
27	A061U440	DE Side Screen (Included In Adaptor Kits)	2	-	-	-
28	A056G699	DE Top And Bottom Screen (Included In Adaptor Kits)	2	-	-	-
29	A057L700	Coupling Disk SAE 14 Kit	1	-	-	-
29	A057L703	Coupling Disk SAE 18 Kit	1	-	-	-

Copyright © 2025 Cummins Inc.

25 S5 (C-F) One Bearing Alternator

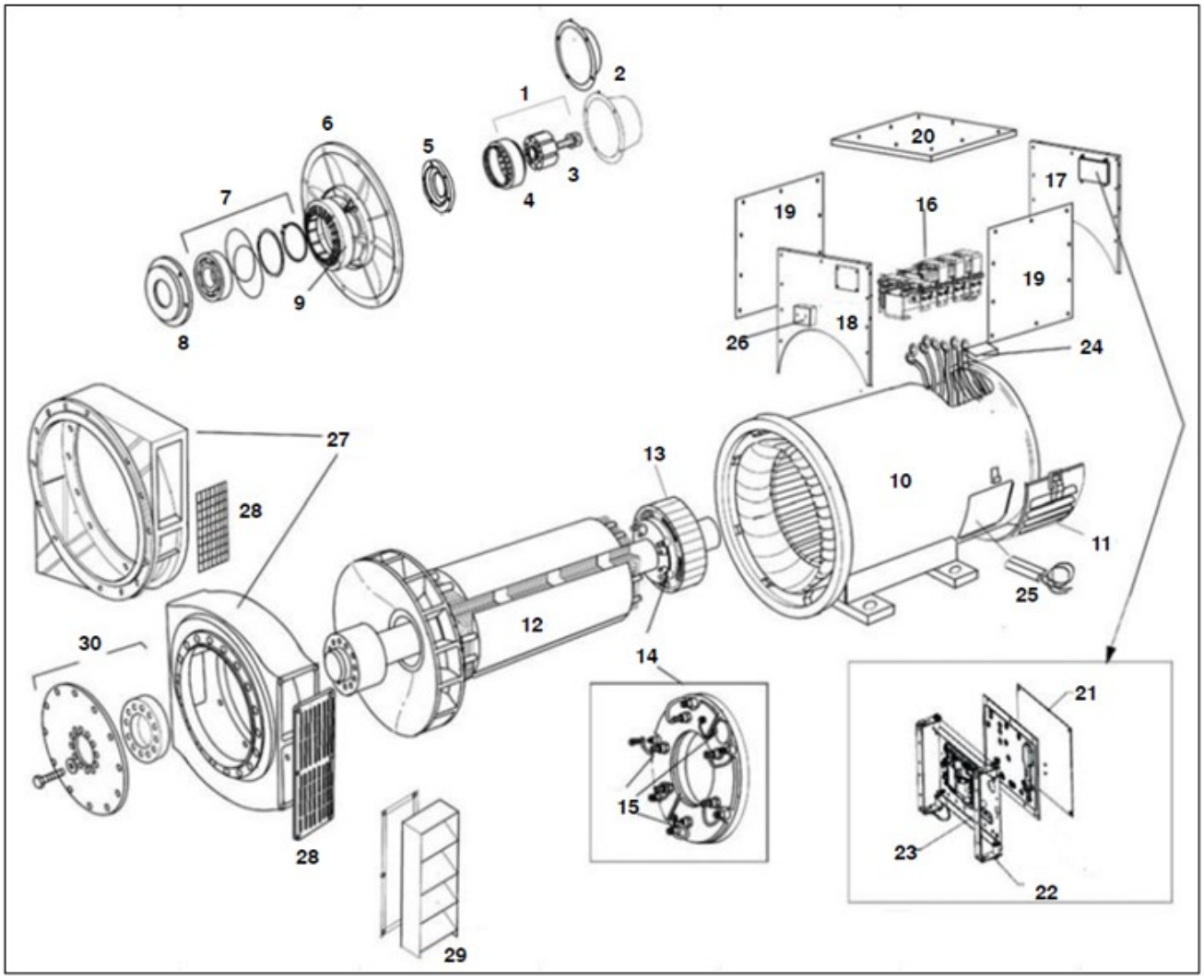

FIGURE 24. S5 (C-F) ONE BEARING ALTERNATOR PARTS DRAWING

TABLE 25. S5 (C-F) ONE BEARING ALTERNATOR PARTS LIST

Item	Part No.	Description	Qty.	Recommended Service Part	RSL Class	RSL Type
1	45-0328A	Complete PMG Upfit Kit	1	Yes	B	SC
2	410-10704	PMG Cover Only Included In Item 1	1	-	-	-
2	410-10705	Non PMG Cover (From 18/08/00)	1	-	-	-
3	45-1082	PMG Rotor/Stator Repair Kit	1	Yes	A	SC
4	45-1082	PMG Rotor/Stator Repair Kit	1	Yes	A	SC
5	520-10812	NDE Bearing Cap (Regreasable Bearing)	1	-	-	-
6	520-10810	NDE Bracket (Regreasable Bearing)	1	-	-	-

 Copyright © 2025 Cummins Inc.

Item	Part No.	Description	Qty.	Recommended Service Part	RSL Class	RSL Type
7	45-0320	NDE Bearing Kit (Sealed) From (30/09/00)	1	Yes	B	M
7	45-1099	NDE Bearing Kit (Regreasable)	1	Yes	B	SC
8	520-10811	NDE Bearing Cartridge From (20/09/2000)	1	-	-	-
9	520-10286	Exciter Stator 65 mm	1	Yes	A	SC
9	A052D940	Exciter Stator 65 mm Severe Environmental	1	Yes	A	SC
10	QMSN	Main Stator Frame Assembly	1	-	-	-
11	462-20100	NDE Air Inlet Cover (Louvred)	1	-	-	-
11	520-10933	NDE Air Inlet Cover (Industrial)	1	-	-	-
12	QMSN	Main Rotor Assembly	1	-	-	-
13	520-1142	Exciter Rotor 65 mm To Fit Internal Bore Diameter 110 mm	1	Yes	A	SC
14	450-16016	Rotating Rectifier Assembly	1	Yes	A	SC
15	RSK-5001	Diode Forward/Reverse And Varistor Kit	1	Yes	A	SC
16	QMSN	Main Terminal Board	1	-	-	-
17	520-10907	Terminal Box End Panel NDE From (20/09/1998)	1	-	-	-
17	520-10911	Terminal Box End Panel NDE (Reverse Entry)	1	-	-	-
17	520-10914	Terminal Box End Panel NDE (Reconnectable)	1	-	-	-
17	520-10917	Terminal Box End Panel NDE (High Box)	1	-	-	-
17	520-10918	Terminal Box End Panel NDE (PG Gland)	1	-	-	-
17	520-10920	Terminal Box End Panel NDE (Railway App)	1	-	-	-
17	520-10982	Terminal Box End Panel NDE (To Fit AVR DM110)	1	-	-	-
17	520-11026	Terminal Box End Panel NDE (EU Machine Dir.)	1	-	-	-
17	520-11028	Terminal Box End Panel NDE (Reverse Entry) (EU Machine Dir.)	1	-	-	-
17	520-11030	Terminal Box End Panel NDE (High Box) (EU Machine Dir.)	1	-	-	-

Item	Part No.	Description	Qty.	Recommended Service Part	RSL Class	RSL Type
17	520-11032	Terminal Box End Panel NDE (PG Gland) (EU Machine Dir.)	1	-	-	-
17	520-11033	Terminal Box End Panel NDE (Railway App) (EU Machine Dir.)	1	-	-	-
18	520-10906	Terminal Box End Panel DE From (08/1998)	1	-	-	-
18	520-10910	Terminal Box End Panel DE (Reverse Entry)	1	-	-	-
18	520-10913	Terminal Box End Panel DE (Reconnectable)	1	-	-	-
18	520-10916	Terminal Box End Panel DE (High Box)	1	-	-	-
18	520-11025	Terminal Box End Panel DE From (EU Machine Dir.)	1	-	-	-
18	520-11027	Terminal Box End Panel DE (Reverse Entry) (EU Machine Dir.)	1	-	-	-
18	520-11029	Terminal Box End Panel DE (High Box) (EU Machine Dir.)	1	-	-	-
19	520-10908	Terminal Box Side Panel From (08/1998)	2	-	-	-
19	520-10909	Terminal Box Side Panel (Air Filters) From (08/1998)	2	-	-	-
19	520-10912	Terminal Box Side Panel (PF Control Diff)	1	-	-	-
19	520-10921	Terminal Box Side Panel (Railway App)	2	-	-	-
19	520-11015	Terminal Box Side Panel (Reconnectable/Air Filters) (EU Machine Dir.)	2	-	-	-
19	520-11031	Terminal Box Side Panel (Railway App) (EU Machine Dir.)	2	-	-	-
20	520-10536	Terminal Box Lid From (08/1998)	1	-	-	-
21	450-14310	AVR Cover Plate	1	-	-	-
21	450-16413	AVR Cover (EU Machine Dir.) (Where AVR Fitted)	1	-	-	-
21	450-16417	AVR Cover (EU Machine Dir. No Mounting Bracket) X 1	1	-	-	-
22	45-0742	AVR Mounting Bracket	1	-	-	-
23	A060B914	AVR DECS-150	1	Yes	A	SC
23	A062Y338	AVR MX322	1	Yes	A	SC

 Copyright © 2025 Cummins Inc.

Item	Part No.	Description	Qty.	Recommended Service Part	RSL Class	RSL Type
23	E000-23212/1P	AVR MX321	1	Yes	A	SC
23	E000-23215/1P	AVR MX321 UL	1	Yes	A	SC
23	E000-23408/1P	AVR MX341 UL	1	Yes	A	SC
23	E000-23412/1P	AVR MX341	1	Yes	A	SC
23	E000-23800	AVR DM110	1	Yes	A	SC
23	E000-24403/1P	AVR AS440	1	Yes	A	SC
23	E000-24408/1P	AVR AS440 UL Approved	1	Yes	A	SC
24	450-15489	Auxiliary Terminal Board	2	-	-	-
25	A053M968	Heater 110-125 V UL Cert	1	-	-	-
25	A053N002	Heater 220-260 V UL Cert	1	-	-	-
25	A053X252	Heater Kit 110-125 V To Include Term Box For Retro UL Cert	1	-	-	-
25	A053X255	Heater Kit 220-260 V To Include Term Box For Retro UL Cert	1	-	-	-
26	45-0024	Terminal Box For Heaters	1	-	-	-
27	45-0666	DE Adaptor Kit SAE 00	1	-	-	-
27	45-0667	DE Adaptor Kit SAE 0	1	-	-	-
27	45-0668	DE Adaptor Kit SAE 0.5	1	-	-	-
27	45-0669	DE Adaptor Kit SAE 1	1	-	-	-
27	45-0802	DE Adaptor Kit (SAE 1 Round)	1	-	-	-
27	45-0917	DE Adaptor Kit (SAE 1 Round/Heavy Duty)	1	-	-	-
27	A051Y674	DE Adaptor Kit (SAE 0 Round/Heavy Duty)	1	-	-	-
28	SEE NO. 27	DE Screen (Included In Adaptor Kits)	2	-	-	-
29	45-0654	DE Louvre SAE 00	1	-	-	-
29	45-0655	DE Louvre SAE 0 And 0.5 And 1	1	-	-	-
30	45-0780	Coupling Kit SAE 14	1	-	-	-
30	45-0781	Coupling Kit SAE 18	1	-	-	-
30	45-0782	Coupling Kit SAE 21	1	-	-	-
30	45-0783	Coupling Kit SAE 17.75	1	-	-	-
Not Shown	45-0281	Kluber Grease 400g	1	Yes	B	M
Not Shown	E000-22070/P	1:1 Isolation Transformer & Bracket Assembly	1	Yes	A	SC

26 S5 (C-F) Two Bearing Alternator

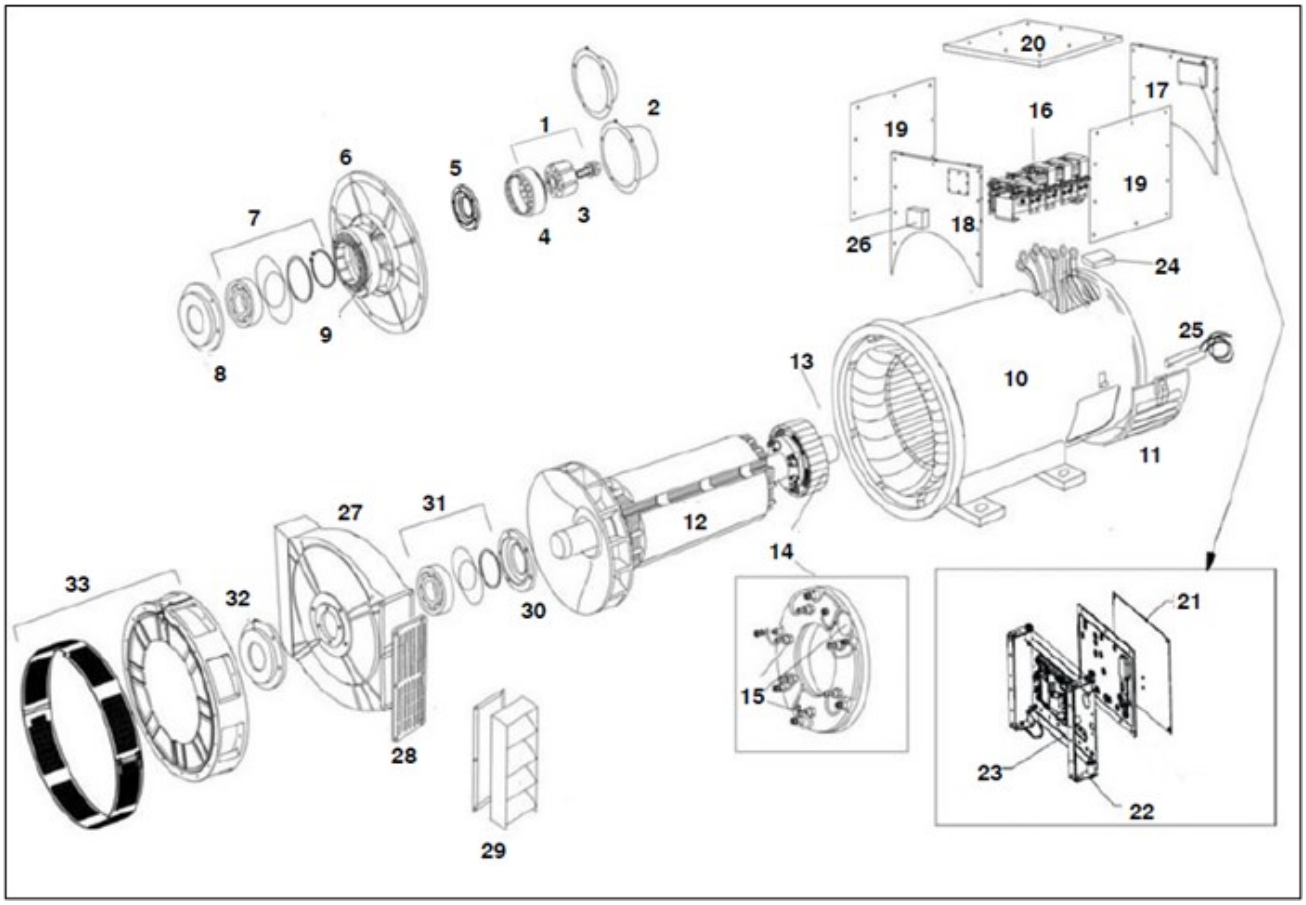

FIGURE 25. S5 (C-F) TWO BEARING ALTERNATOR PARTS DRAWING

TABLE 26. S5 (C-F) TWO BEARING ALTERNATOR PARTS LIST

Item	Part No.	Description	Qty.	Recommended Service Part	RSL Class	RSL Type
1	45-0328A	Complete PMG Upfit Kit	1	Yes	B	SC
2	410-10704	PMG Cover Only Included In Item 1	1	-	-	-
2	410-10705	Non PMG Cover (From 18/08/00)	1	-	-	-
3	45-1082	PMG Rotor/Stator Repair Kit	1	Yes	A	SC
4	45-1082	PMG Rotor/Stator Repair Kit	1	Yes	A	SC
5	520-10812	NDE Bearing Cap (Regreasable Bearing)	1	-	-	-
6	520-10780	NDE Bracket From (30/09/00)	1	-	-	-
6	520-10810	NDE Bracket (Regreasable Bearing)	1	-	-	-
7	45-0320	NDE Bearing Kit (Sealed) From (30/09/00)	1	Yes	B	M

 Copyright © 2025 Cummins Inc.

Item	Part No.	Description	Qty.	Recommended Service Part	RSL Class	RSL Type
7	45-1099	NDE Bearing Kit (Regreasable)	1	Yes	B	SC
8	520-10811	NDE Bearing Cartridge From (20/09/2000)	1	-	-	-
9	520-10286	Exciter Stator 65 mm	1	Yes	A	SC
9	A052D940	Exciter Stator 65 mm Severe Environmental	1	Yes	A	SC
10	QMSN	Main Stator Frame Assembly	1	-	-	-
11	462-20100	NDE Air Inlet Cover (Louvred)	1	-	-	-
11	520-10933	NDE Air Inlet Cover (Industrial)	1	-	-	-
12	QMSN	Main Rotor Assembly	1	-	-	-
13	520-1142	Exciter Rotor 65 mm To Fit Internal Bore Diameter 110 mm	1	Yes	A	SC
14	450-16016	Rotating Rectifier Assembly	1	Yes	A	SC
15	RSK-5001	Diode Forward/Reverse And Varistor Kit	1	Yes	A	SC
16	QMSN	Main Terminal Board	1	-	-	-
17	520-10907	Terminal Box End Panel NDE From (20/09/1998)	1	-	-	-
17	520-10911	Terminal Box End Panel NDE (Reverse Entry)	1	-	-	-
17	520-10914	Terminal Box End Panel NDE (Reconnectable)	1	-	-	-
17	520-10917	Terminal Box End Panel NDE (High Box)	1	-	-	-
17	520-10918	Terminal Box End Panel NDE (PG Gland)	1	-	-	-
17	520-10920	Terminal Box End Panel NDE (Railway App)	1	-	-	-
17	520-10982	Terminal Box End Panel NDE (To Fit AVR DM110)	1	-	-	-
17	520-11026	Terminal Box End Panel NDE (EU Machine Dir.)	1	-	-	-
17	520-11028	Terminal Box End Panel NDE (Reverse Entry) (EU Machine Dir.)	1	-	-	-
17	520-11030	Terminal Box End Panel NDE (High Box) (EU Machine Dir.)	1	-	-	-

Copyright © 2025 Cummins Inc.

Item	Part No.	Description	Qty.	Recommended Service Part	RSL Class	RSL Type
17	520-11032	Terminal Box End Panel NDE (PG Gland) (EU Machine Dir.)	1	-	-	-
17	520-11033	Terminal Box End Panel NDE (Railway App) (EU Machine Dir.)	1	-	-	-
18	520-10906	Terminal Box End Panel DE From (08/1998)	1	-	-	-
18	520-10910	Terminal Box End Panel DE (Reverse Entry)	1	-	-	-
18	520-10913	Terminal Box End Panel DE (Reconnectable)	1	-	-	-
18	520-10916	Terminal Box End Panel DE (High Box)	1	-	-	-
18	520-11025	Terminal Box End Panel DE From (EU Machine Dir.)	1	-	-	-
18	520-11027	Terminal Box End Panel DE (Reverse Entry) (EU Machine Dir.)	1	-	-	-
18	520-11029	Terminal Box End Panel DE (High Box) (EU Machine Dir.)	1	-	-	-
19	520-10908	Terminal Box Side Panel From (08/1998)	2	-	-	-
19	520-10909	Terminal Box Side Panel (Air Filters) From (08/1998)	2	-	-	-
19	520-10912	Terminal Box Side Panel (PF Control Diff)	1	-	-	-
19	520-10921	Terminal Box Side Panel (Railway App)	2	-	-	-
19	520-11015	Terminal Box Side Panel (Reconnectable/Air Filters) (EU Machine Dir.)	2	-	-	-
19	520-11031	Terminal Box Side Panel (Railway App) (EU Machine Dir.)	2	-	-	-
20	520-10536	Terminal Box Lid From (08/1998)	1	-	-	-
21	450-14310	AVR Cover Plate	1	-	-	-
21	450-16413	AVR Cover (EU Machine Dir.) (Where AVR Fitted)	1	-	-	-
21	450-16417	AVR Cover (EU Machine Dir. No Mounting Bracket) X 1	1	-	-	-
22	45-0742	AVR Mounting Bracket	1	-	-	-
23	A060B914	AVR DECS-150	1	Yes	A	SC
23	A062Y338	AVR MX322	1	Yes	A	SC

 Copyright © 2025 Cummins Inc.

Item	Part No.	Description	Qty.	Recommended Service Part	RSL Class	RSL Type
23	E000-23212/1P	AVR MX321	1	Yes	A	SC
23	E000-23215/1P	AVR MX321 UL	1	Yes	A	SC
23	E000-23408/1P	AVR MX341 UL	1	Yes	A	SC
23	E000-23412/1P	AVR MX341	1	Yes	A	SC
23	E000-23800	AVR DM110	1	Yes	A	SC
23	E000-24403/1P	AVR AS440	1	Yes	A	SC
23	E000-24408/1P	AVR AS440 UL Approved	1	Yes	A	SC
24	450-15489	Auxiliary Terminal Board	2	-	-	-
25	A053M968	Heater 110-125 V UL Cert	1	-	-	-
25	A053N002	Heater 220-260 V UL Cert	1	-	-	-
25	A053X252	Heater Kit 110-125 V To Include Term Box For Retro UL Cert	1	-	-	-
25	A053X255	Heater Kit 220-260 V To Include Term Box For Retro UL Cert	1	-	-	-
26	45-0024	Terminal Box For Heaters	1	-	-	-
27	462-11170	DE Bracket To (29/09/2000)	1	-	-	-
27	520-10557	DE Bracket From (29/09/2000)	1	-	-	-
28	462-10260	DE Bracket Screen	2	-	-	-
29	45-0656	DE Louvre Kit	2	-	-	-
30	520-10776	DE Bearing Cartridge From (30/09/2000)	1	-	-	-
30	520-10816	DE Bearing Cartridge (Regrease)	1	-	-	-
31	45-1100	DE Bearing Kit (Regrease)	1	Yes	B	M
31	45-0321	DE Bearing Kit (Sealed) From (30/09/2000)	1	Yes	B	M
32	520-10778	DE Bearing Cap Outer From (30/09/2000)	1	-	-	-
32	520-10818	DE Bearing Cap (Regrease)	1	-	-	-
33	45-0678	2 Bearing Adaptor Kit SAE 00	1	-	-	-
33	45-0679	2 Bearing Adaptor Kit SAE 0	1	-	-	-
33	45-0680	2 Bearing Adaptor Kit SAE 0.5	1	-	-	-
33	45-0681	2 Bearing Adaptor Kit SAE 1	1	-	-	-

Item	Part No.	Description	Qty.	Recommended Service Part	RSL Class	RSL Type
33	45-0808	2 Bearing Adaptor Kit SAE 1 DIN	1	-	-	-
33	45-0932	2 Bearing Adaptor Kit SAE 0 DIN	1	-	-	-
34	INCLUDED IN 33	DE Cover Screen (Included In Kits)	1	-	-	-
Not Shown	45-0281	Kluber Grease 400g	1	Yes	B	M
Not Shown	E000-22070/P	1:1 Isolation Transformer & Bracket Assembly	1	Yes	A	SC

 Copyright © 2025 Cummins Inc.

This page is intentionally blank.

27 HC634 (G-K) One Bearing (Ser 3) Alternator

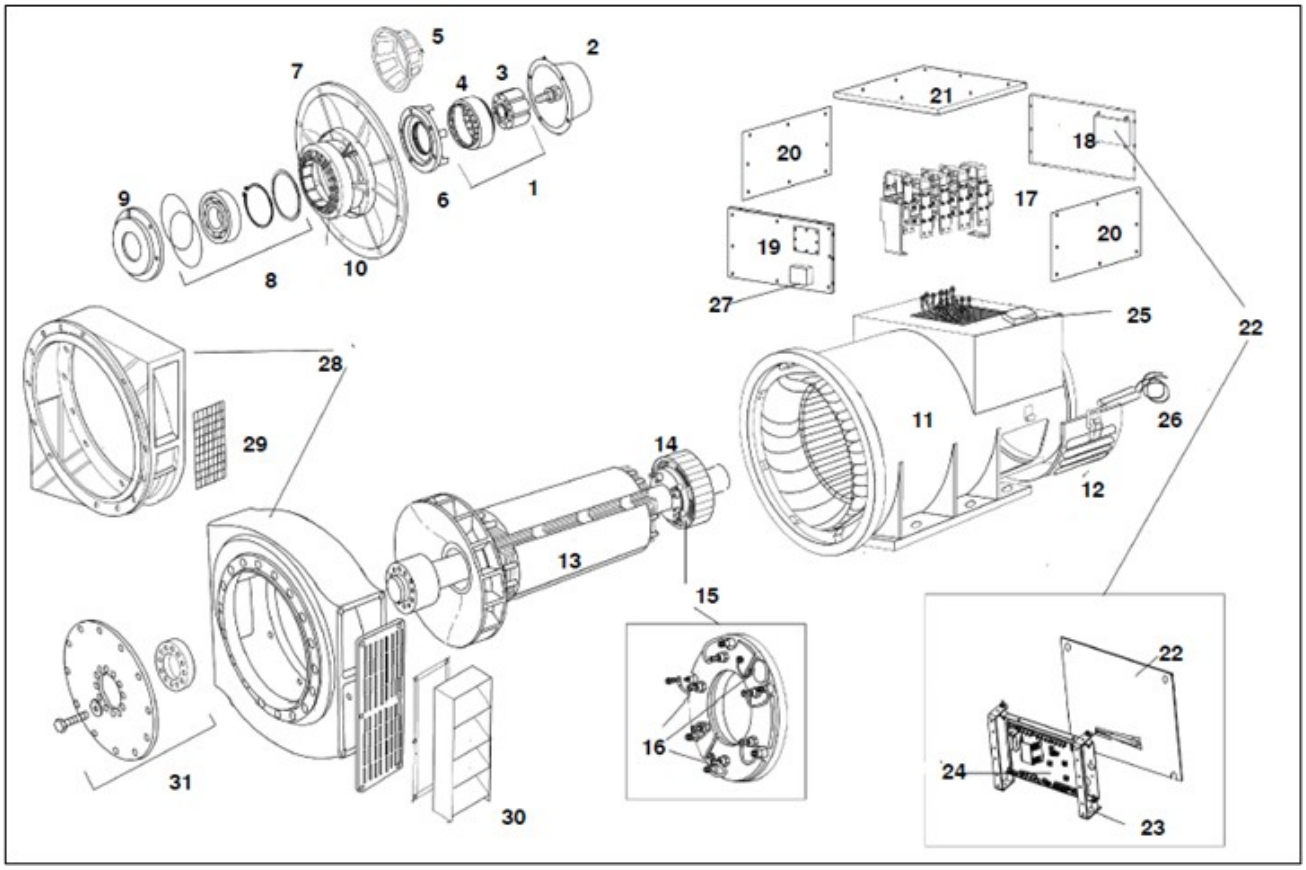

FIGURE 26. HC634 (G-K) ONE BEARING (SER 3) ALTERNATOR PARTS DRAWING

TABLE 27. HC634 (G-K) ONE BEARING (SER 3) ALTERNATOR PARTS LIST

Item	Part No.	Description	Qty.	Recommended Service Part	RSL Class	RSL Type
1	45-0341A	Complete PMG Upfit Kit	1	Yes	B	SC
1	45-0060A	Complete PMG Upfit Kit To (10/05/01) (Obsolete)	1	-	-	-
2	760-10562	PMG Cover (Cover Included In Above Kit)	1	-	-	-
3	45-1082	PMG Rotor/Stator Repair Kit	1	Yes	A	SC
4	45-1082	PMG Rotor/Stator Repair Kit	1	Yes	A	SC
5	SEE NO.1	PMG Crown (If Fitted)	1	-	-	-
6	660-10071	NDE Bearing Cap To (10/05/01)	1	-	-	-
6	660-10864	NDE Bearing Cap From (10/05/01)	1	-	-	-
7	660-10064	NDE Bracket To (10/05/01)	1	-	-	-

 Copyright © 2025 Cummins Inc.

Item	Part No.	Description	Qty.	Recommended Service Part	RSL Class	RSL Type
7	660-10860	NDE Bracket From (10/05/01)	1	-	-	-
8	45-0340	NDE Bearing Kit (Sealed)	1	Yes	B	M
8	45-0297	NDE Bearing Kit (Sealed) To (10/05/01)	1	Yes	B	M
8	45-0343	NDE Bearing Kit (Regrease)	1	Yes	B	M
9	462-12920	NDE Bearing Cartridge To (10/05/01)	1	-	-	-
9	660-10862	NDE Bearing Cartridge From (10/05/01)	1	-	-	-
10	366-40800	Exciter Stator 75 mm	1	Yes	A	SC
10	A052D957	Exciter Stator 75 mm Severe Environmental	1	Yes	A	SC
11	QMSN	Main Stator Frame Assembly	1	-	-	-
12	464-31600	NDE Air Inlet Cover (Marine)	1	-	-	-
12	464-32100	NDE Air Inlet Cover (Air Filters)	1	-	-	-
12	660-11565	NDE Air Inlet Cover (Industrial)	1	-	-	-
13	QMSN	Main Rotor Assembly	1	-	-	-
14	660-1010	Exciter Rotor 75 mm	1	Yes	A	SC
15	450-16025	Rotating Rectifier Assembly	1	Yes	A	SC
16	RSK-6001	Diode Forward/Reverse And Varistor Kit	1	Yes	A	SC
17	QMSN	Main Terminal Board	1	-	-	-
18	660-10653	Terminal Box End Panel NDE	1	-	-	-
18	660-10655	Terminal Box End Panel NDE (PG Gland And Diff Protection)	1	-	-	-
18	660-10925	Terminal Box End Panel NDE (Hi-Reconnectable)	1	-	-	-
18	660-11220	Terminal Box End Panel NDE (Hi-Air Filters)	1	-	-	-
18	660-11604	Terminal Box End Panel NDE (Standard Digital AVR)	1	-	-	-
18	660-11682	Terminal Box End Panel NDE (EU Machine Dir.)	1	-	-	-
18	660-11684	Terminal Box End Panel NDE (PG Gland And Diff Protection) (EU Machine Dir.)	1	-	-	-

Item	Part No.	Description	Qty.	Recommended Service Part	RSL Class	RSL Type
18	660-11689	Terminal Box End Panel NDE (Hi-Reconnectable) (EU Machine Dir.)	1	-	-	-
18	660-11691	Terminal Box End Panel NDE (Hi-Air Filters) (EU Machine Dir.)	1	-	-	-
19	660-10652	Terminal Box End Panel De	1	-	-	-
19	660-10654	Terminal Box End Panel De(Diff/Protection)	1	-	-	-
19	660-10783	Terminal Box End Panel DE (PG Gland Diff Protection)	1	-	-	-
19	660-10784	Terminal Box End Panel DE (PG Gland Or Standard Digital AVR)	1	-	-	-
19	660-10924	Terminal Box End Panel DE (Hi-Reconnectable)	1	-	-	-
19	660-11219	Terminal Box End Panel DE (Hi-Air Filters)	1	-	-	-
19	660-11681	Terminal Box End Panel DE (EU Machine Dir.)	1	-	-	-
19	660-11683	Terminal Box End Panel De(Diff/Protection) (EU Machine Dir.)	1	-	-	-
19	660-11686	Terminal Box End Panel DE (PG Gland Diff Protection) (EU Machine Dir.)	1	-	-	-
19	660-11687	Terminal Box End Panel DE (PG Gland Or Standard Digital AVR) (EU Machine Dir.)	1	-	-	-
19	660-11688	Terminal Box End Panel DE (Hi-Reconnectable) (EU Machine Dir.)	1	-	-	-
19	660-11690	Terminal Box End Panel DE (Hi-Air Filters) (EU Machine Dir.)	1	-	-	-
20	660-10650	Terminal Box Side Panel	2	-	-	-
20	660-10923	Terminal Box Side Panel (Hi-Reconnectable And A/F)	2	-	-	-
20	660-11242	Terminal Box Side Panel (Air Filter)	2	-	-	-
21	660-10651	Terminal Box Lid	1	-	-	-
22	450-14310	AVR Cover Plate	1	-	-	-
22	450-15254	AVR Cover Plate (Access)	1	-	-	-

 Copyright © 2025 Cummins Inc.

Item	Part No.	Description	Qty.	Recommended Service Part	RSL Class	RSL Type
22	450-16413	AVR Plastic Cover (EU Machine Dir.)	1	-	-	-
22	450-16417	AVR Cover Plate (Access) (EU Machine Dir.)	1	-	-	-
23	45-0742	AVR Mounting Bracket	1	-	-	-
24	A060B914	AVR DECS-150	1	Yes	A	SC
24	A062Y338	AVR MX322	1	Yes	A	SC
24	E000-23212/1P	AVR MX321	1	Yes	A	SC
24	E000-23215/1P	AVR MX321 UL	1	Yes	A	SC
24	E000-23408/1P	AVR MX341 UL	1	Yes	A	SC
24	E000-23412/1P	AVR MX341	1	Yes	A	SC
24	E000-23800	AVR DM110	1	Yes	A	SC
25	003-14055	Auxiliary Terminal Board	2	-	-	-
26	A053M968	Heater Kit 110-125 V UL Cert	1	-	-	-
26	A053N002	Heater 220-260 V UL Cert	1	-	-	-
26	A053X252	Heater Kit 110-125 V To Include Term Box For Retro UL Cert	1	-	-	-
26	A053X255	Heater Kit 220-260 V To Include Term Box For Retro UL Cert	1	-	-	-
27	45-0024	Terminal Box For Heaters	1	-	-	-
28	45-0937	DE Adaptor Kit SAE 1	1	-	-	-
28	45-0942	DE Adaptor Kit SAE 00	1	-	-	-
28	45-0943	DE Adaptor Kit SAE 0	1	-	-	-
28	45-0944	DE Adaptor Kit SAE 0.5	1	-	-	-
28	45-0945	DE Adaptor Kt SAE 0 Round	1	-	-	-
29	SEE NO. 30	DE Screen (Included In Adaptor Kits)	2	-	-	-
30	45-0657	DE Louvre SAE 00	1	-	-	-
30	45-0658	DE Louvre SAE 0 And 0.5 And 1	1	-	-	-
31	45-0788	Coupling Kit SAE 14	1	-	-	-
31	45-0789	Coupling Kit SAE 18	1	-	-	-
31	45-0790	Coupling Kit SAE 21	1	-	-	-
31	45-0791	Coupling Kit SAE 17.75	1	-	-	-

28 HC634 (G-K) Two Bearing (Ser 3) Alternator

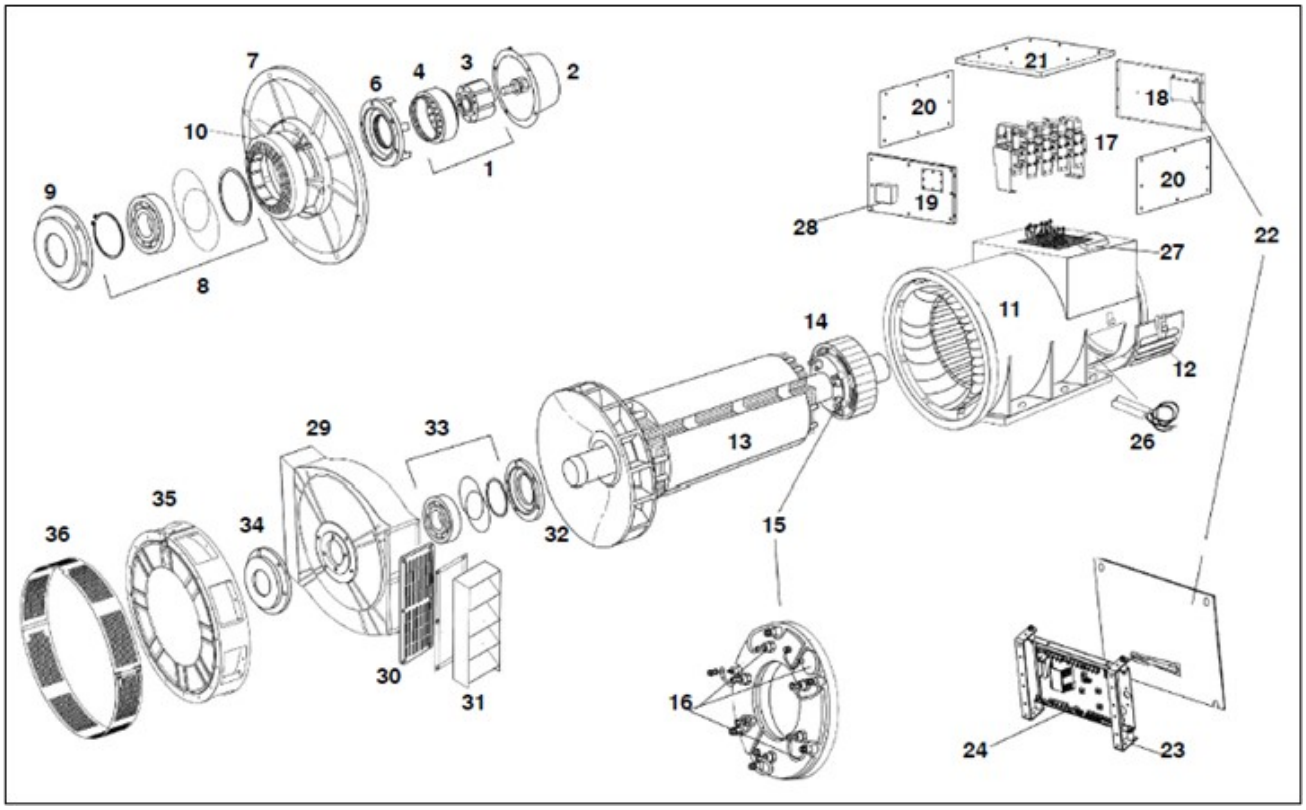

FIGURE 27. HC634 (G-K) TWO BEARING (SER 3) ALTERNATOR PARTS DRAWING

TABLE 28. HC634 (G-K) TWO BEARING (SER 3) ALTERNATOR PARTS

Item	Part No.	Description	Qty.	Recommended Service Part	RSL Class	RSL Type
1	45-0341A	Complete PMG Upfit Kit	1	Yes	A	SC
1	45-0060A	Complete PMG Upfit Kit To (10/05/01) (Obsolete)	1	-	-	-
2	760-10562	PMG Cover (Cover Included In Above Kit)	1	-	-	-
3	45-1082	PMG Rotor/Stator Repair Kit	1	Yes	A	SC
4	45-1082	PMG Rotor/Stator Repair Kit	1	Yes	A	SC
5	SEE NO.1	PMG Crown (If Fitted)	1	-	-	-
6	660-10071	NDE Bearing Cap To (10/05/01)	1	-	-	-
6	660-10864	NDE Bearing Cap From (10/05/01)	1	-	-	-
7	660-10064	NDE Bracket To (10/05/01)	1	-	-	-
7	660-10860	NDE Bracket From (10/05/01)	1	-	-	-

 Copyright © 2025 Cummins Inc.

Item	Part No.	Description	Qty.	Recommended Service Part	RSL Class	RSL Type
8	45-0340	NDE Bearing Kit (Sealed)	1	Yes	A	M
8	45-0295	NDE Bearing Kit (Sealed) To (10/05/01)	1	Yes	A	M
8	45-0343	NDE Bearing Kit (Regrease)	1	Yes	A	M
9	462-12920	NDE Bearing Cartridge To (10/05/01)	1	-	-	-
9	660-10862	NDE Bearing Cartridge From (10/05/01)	1	-	-	-
10	366-40800	Exciter Stator 75 mm	1	Yes	A	SC
10	A052D957	Exciter Stator 75 mm Severe Environmental	1	Yes	A	SC
11	QMSN	Main Stator Frame Assembly	1	-	-	-
12	464-31600	NDE Air Inlet Cover (Marine)	1	-	-	-
12	464-32100	NDE Air Inlet Cover (Air Filters)	1	-	-	-
12	660-11565	NDE Air Inlet Cover (Industrial)	1	-	-	-
13	QMSN	Main Rotor Assembly	1	-	-	-
14	660-1010	Exciter Rotor 75 mm	1	Yes	A	SC
15	450-16025	Rotating Rectifier Assembly	1	Yes	A	SC
16	RSK-6001	Diode Forward/Reverse And Varistor Kit	1	Yes	A	SC
17	QMSN	Main Terminal Board	1	-	-	-
18	660-10653	Terminal Box End Panel NDE	1	-	-	-
18	660-10655	Terminal Box End Panel NDE (PG Gland And Diff Protection)	1	-	-	-
18	660-10925	Terminal Box End Panel NDE (Hi-Reconnectable)	1	-	-	-
18	660-11220	Terminal Box End Panel NDE (Hi-Air Filters)	1	-	-	-
18	660-11604	Terminal Box End Panel NDE (Standard Digital AVR)	1	-	-	-
18	660-11682	Terminal Box End Panel NDE (EU Machine Dir.)	1	-	-	-
18	660-11684	Terminal Box End Panel NDE (PG Gland And Diff Protection) (EU Machine Dir.)	1	-	-	-
18	660-11689	Terminal Box End Panel NDE (Hi-Reconnectable) (EU Machine Dir.)	1	-	-	-

Item	Part No.	Description	Qty.	Recommended Service Part	RSL Class	RSL Type
18	660-11691	Terminal Box End Panel NDE (Hi-Air Filters) (EU Machine Dir.)	1	-	-	-
19	660-10652	Terminal Box End Panel DE	1	-	-	-
19	660-10654	Terminal Box End Panel DE (Diff/Protection)	1	-	-	-
19	660-10783	Terminal Box End Panel DE (PG Gland Diff Protection)	1	-	-	-
19	660-10784	Terminal Box End Panel DE (PG Gland Or Standard Digital AVR)	1	-	-	-
19	660-10924	Terminal Box End Panel DE (Hi-Reconnectable)	1	-	-	-
19	660-11219	Terminal Box End Panel DE (Hi-Air Filters)	1	-	-	-
19	660-11681	Terminal Box End Panel DE (EU Machine Dir.)	1	-	-	-
19	660-11683	Terminal Box End Panel DE (Diff/Protection) (EU Machine Dir.)	1	-	-	-
19	660-11686	Terminal Box End Panel DE (Hi-Reconnectable) (EU Machine Dir.)	1	-	-	-
19	660-11686	Terminal Box End Panel DE (PG Gland Diff Protection) (EU Machine Dir.)	1	-	-	-
19	660-11687	Terminal Box End Panel DE (PG Gland Or Standard Digital AVR) (EU Machine Dir.)	1	-	-	-
19	660-11690	Terminal Box End Panel DE (Hi-Air Filters) (EU Machine Dir.)	1	-	-	-
20	660-10650	Terminal Box Side Panel	2	-	-	-
20	660-10923	Terminal Box Side Panel (Hi-Reconnectable And A/F)	2	-	-	-
20	660-11242	Terminal Box Side Panel (Air Filter)	2	-	-	-
21	660-10651	Terminal Box Lid	1	-	-	-
22	450-14310	AVR Cover Plate	1	-	-	-
22	450-15254	AVR Cover Plate (Access)	1	-	-	-
22	450-16413	AVR Plastic Cover (EU Machine Dir.)	1	-	-	-
22	450-16417	AVR Cover Plate (Access) (EU Machine Dir.)	1	-	-	-

 Copyright © 2025 Cummins Inc.

Item	Part No.	Description	Qty.	Recommended Service Part	RSL Class	RSL Type
23	45-0742	AVR Mounting Bracket	1	-	-	-
24	A060B914	AVR DECS-150	1	Yes	A	SC
24	A062Y338	AVR MX322	1	Yes	A	SC
24	E000-23212/1P	AVR MX321	1	Yes	A	SC
24	E000-23215/1P	AVR MX321 UL	1	Yes	A	SC
24	E000-23408/1P	AVR MX341 UL	1	Yes	A	SC
24	E000-23412/1P	AVR MX341	1	Yes	A	SC
24	E000-23800	AVR DM110	1	Yes	A	SC
25	003-14055	Auxiliary Terminal Board	2	-	-	-
26	003-14055	Auxiliary Terminal Board	2	-	-	-
27	A053M968	Heater Kit 110-125 V UL Cert	1	-	-	-
27	A053N002	Heater 220-260 V UL Cert	1	-	-	-
27	A053X252	Heater Kit 110-125 V To Include Term Box For Retro UL Cert	1	-	-	-
27	A053X255	Heater Kit 220-260 V To Include Term Box For Retro UL Cert	1	-	-	-
28	45-0024	Terminal Box For Heaters	1	-	-	-
29	464-15630	DE Bracket To (25/04/98)	1	-	-	-
29	660-10868	DE Bracket From (25/04/98)	1	-	-	-
30	464-15650	DE Bracket Screen	2	-	-	-
31	45-0659	DE Louvre	2	-	-	-
32	464-15090	DE Bearing Cartridge To (25/04/98)	1	-	-	-
32	660-10870	DE Bearing Cartridge From (25/04/98)	1	-	-	-
33	45-0294	DE Bearing Kit (Sealed) To (25/04/98)	1	Yes	A	M
33	45-0339	DE Bearing Kit (Sealed)	1	Yes	A	M
33	45-0342	DE Bearing Kt (Regrease)	1	Yes	A	M
34	660-10074	DE Bearing Cap Outer To (25/04/98)	1	-	-	-
34	660-10872	DE Bearing Cap Outer From (25/04/98)	1	-	-	-
35	45-0682	2 Bearing Adaptor Kit (SAE 00)	1	-	-	-
35	45-0683	2 Bearing Adaptor Kit (SAE 0)	1	-	-	-

Item	Part No.	Description	Qty.	Recommended Service Part	RSL Class	RSL Type
36	INCLUDED IN 34	DE Cover Screen (Included In Kits)	1	-	-	-

 Copyright © 2025 Cummins Inc.

This page is intentionally blank.

29 S6 (C-H) One Bearing (Dedicated) Alternator

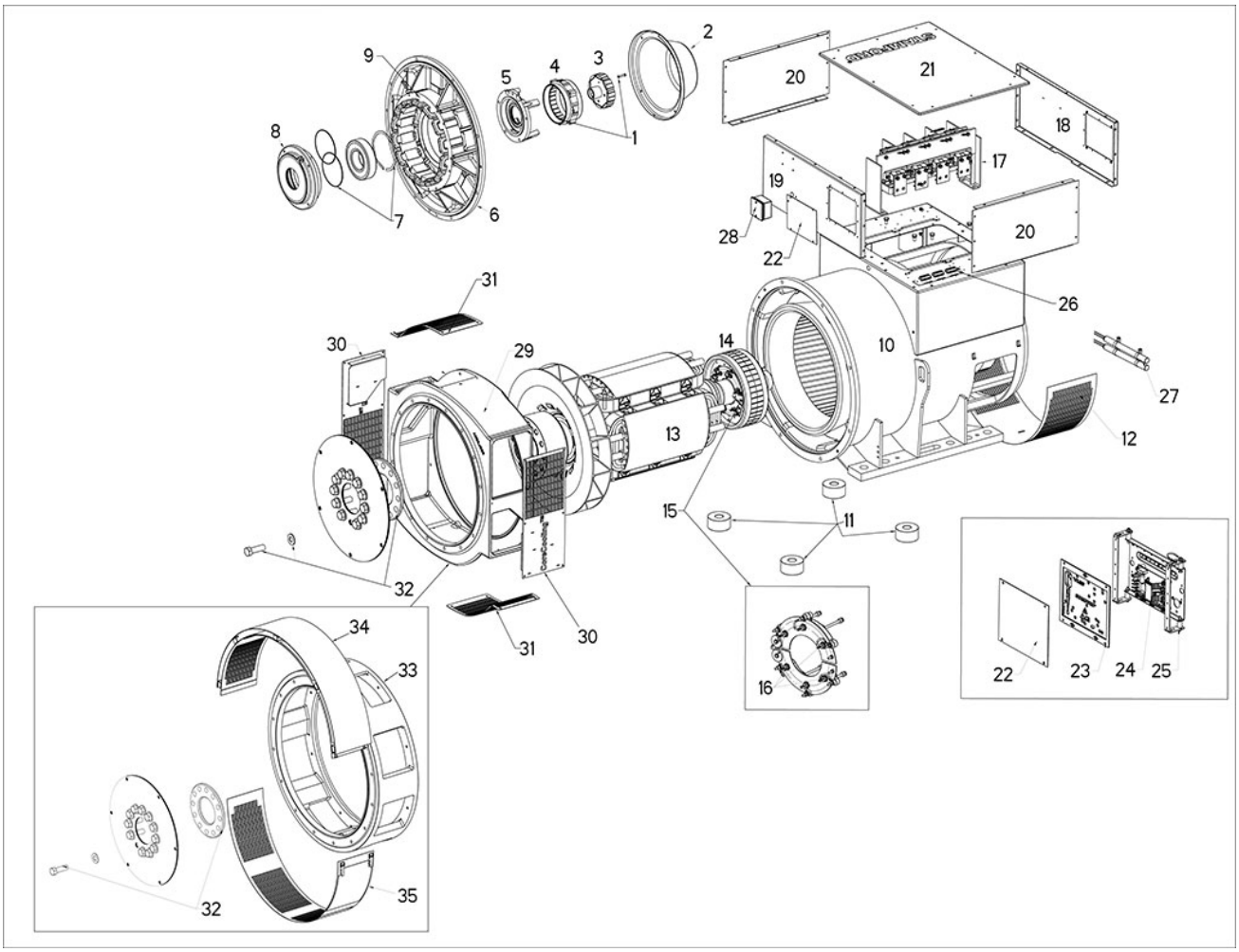

FIGURE 28. S6 (C-H) ONE BEARING (DEDICATED) ALTERNATOR PARTS DRAWING

TABLE 29. S6 (C-H) ONE BEARING (DEDICATED) ALTERNATOR PARTS LIST

Item	Part No.	Description	Qty.	Recommended Service Part	RSL Class	RSL Type
1	45-0341A	Complete PMG Upfit Kit	1	Yes	B	SC
2	760-10562	PMG Cover (Cover Included In Above Kit)	1	-	-	-
3	45-1082	PMG Rotor/Stator Repair Kit	1	Yes	A	SC
4	45-1082	PMG Rotor/Stator Repair Kit	1	Yes	A	SC
5	660-10864	NDE Bearing Cap	1	-	-	-
6	660-10860	NDE Bracket	1	-	-	-
7	45-0340	NDE Bearing Kit (Sealed)	1	Yes	B	M
8	660-10862	NDE Bearing Cartridge	1	-	-	-

 Copyright © 2025 Cummins Inc.

Item	Part No.	Description	Qty.	Recommended Service Part	RSL Class	RSL Type
9	A057B916	Exciter Stator 65 mm (C-D)	1	Yes	A	SC
9	A057B918	Exciter Stator 75 mm (E-H)	1	Yes	A	SC
10	QMSN	Main Stator Frame Assembly	1	-	-	-
11	A057L515	Foot Space	4	-	-	-
12	660-11565	NDE Air Inlet Cover (Industrial)	1	-	-	-
13	QMSN	Main Rotor Assembly	1	-	-	-
14	A057B921	Exciter Rotor 65 mm (C-D)	1	Yes	A	SC
14	A057B923	Exciter Rotor 75 mm (E-H)	1	Yes	A	SC
15	450-16025	Rotating Rectifier Assembly	1	Yes	A	SC
16	RSK-6001	Diode Forward/Reverse And Varistor Kit	1	Yes	A	SC
17	QMSN	Main Terminal Board	1	-	-	-
18	660-11604	Terminal Box End Panel NDE (Standard Digital AVR)	1	-	-	-
18	660-11682	Terminal Box End Panel NDE (EU Machine Dir.)	1	-	-	-
18	660-11689	Terminal Box End Panel NDE (Hi-Reconnectable) (EU Machine Dir.)	1	-	-	-
19	660-11681	Terminal Box End Panel DE (EU Machine Dir.)	1	-	-	-
19	660-11687	Terminal Box End Panel DE (PG Gland Or Standard Digital AVR) (EU Machine Dir.)	1	-	-	-
19	660-11688	Terminal Box End Panel DE (Hi-Reconnectable) (EU Machine Dir.)	1	-	-	-
20	660-10650	Terminal Box Side Panel	2	-	-	-
20	660-10923	Terminal Box Side Panel (Hi-Reconnectable And AF)	2	-	-	-
21	660-10651	Terminal Box Lid	1	-	-	-
22	450-16414	AVR Cover Plate (EU Machine Dir.)	1	-	-	-
22	450-16417	AVR Cover Plate (Access) (EU Machine Dir.)	1	-	-	-
23	450-16413	AVR Plastic Cover (EU Machine Dir.)	1	-	-	-
24	45-0742	AVR Mounting Bracket	1	-	-	-
25	A054S072	AVR DECS-100	1	Yes	A	SC
25	A060B914	AVR DECS-150	1	Yes	A	SC

Item	Part No.	Description	Qty.	Recommended Service Part	RSL Class	RSL Type
25	A062Y338	AVR MX322	1	Yes	A	SC
25	E000-23212/1P	AVR MX321	1	Yes	A	SC
25	E000-23215/1P	AVR MX321 UL	1	Yes	A	SC
25	E000-23408/1P	AVR MX341 UL	1	Yes	A	SC
25	E000-23412/1P	AVR MX341	1	Yes	A	SC
26	003-14055	Auxiliary Terminal Board	2	-	-	-
27	A053M968	Heater Kit 110-125 V UL Cert	1	-	-	-
27	A053N002	Heater 220-260 V UL Cert	1	-	-	-
27	A053X252	Heater Kit 110-125 V To Include Term Box For Retro UL Cert	1	-	-	-
27	A053X255	Heater Kit 220-260 V To Include Term Box For Retro UL Cert	1	-	-	-
28	45-0024	Terminal Box For Heaters	1	-	-	-
29	A058A516	S6 1 Bearing Adaptor Kit SAE 1 660 Fan (C-F)	1	-	-	-
30	A056G571	DE Adaptor Side Cover SAE 1 660 Fan (C-F) (Item Included In Item 29)	2	-	-	-
31	A056G699	DE Adaptor Top And Bottom Cover SAE 1 660 Fan (C-F) (Item Included In Item 29)	2	-	-	-
32	45-0788	Coupling Kit SAE 14	1	-	-	-
32	45-0789	Coupling Kit SAE 18	1	-	-	-
32	45-0790	Coupling Kit SAE 21	1	-	-	-
33	A076H356	S6 1 Bearing Adaptor Kit SAE 0 660 Fan (C-F)	1	-	-	-
33	A064Y167	S6 1 Bearing Adaptor Kit SAE 00 800 Fan (G-H)	1	-	-	-
33	A064Y191	S6 1 Bearing Adaptor Kit SAE 0 800 Fan (G-H)	1	-	-	-
34	A074F402	DE Adaptor Top Cover SAE 0 660 Fan (C-F) (Item Included In Item 33)	1	-	-	-
34	A060W999	DE Adaptor Top Cover SAE 0 800 Fan (G-H) (Item Included In Item 33)	1	-	-	-
34	A063Y666	DE Adaptor Top Cover SAE 00 800 Fan (G-H) (Item Included In Item 33)	1	-	-	-

 Copyright © 2025 Cummins Inc.

Item	Part No.	Description	Qty.	Recommended Service Part	RSL Class	RSL Type
35	660-10903	DE Adaptor Bottom Cover SAE 0 660 Fan (C-F) (Item Included In Item 33)	1	-	-	-
35	A063B378	DE Adaptor Bottom Cover SAE 0 800 Fan (G-H) (Item Included In Item 33)	1	-	-	-
35	760-10928	DE Adaptor Bottom Cover SAE 00 800 Fan (G-H) (Item Included In Item 33)	1	-	-	-
Not Shown	45-0281	Kluber Grease 400g	1	Yes	B	M
Not Shown	450-42100	2:1 Isolation Transformer	1	Yes	A	SC
Not Shown	E000-22070/P	1:1 Isolation Transformer & Bracket Assembly	1	Yes	A	SC

30 S6 (C-H) Two Bearing (Dedicated) Alternator

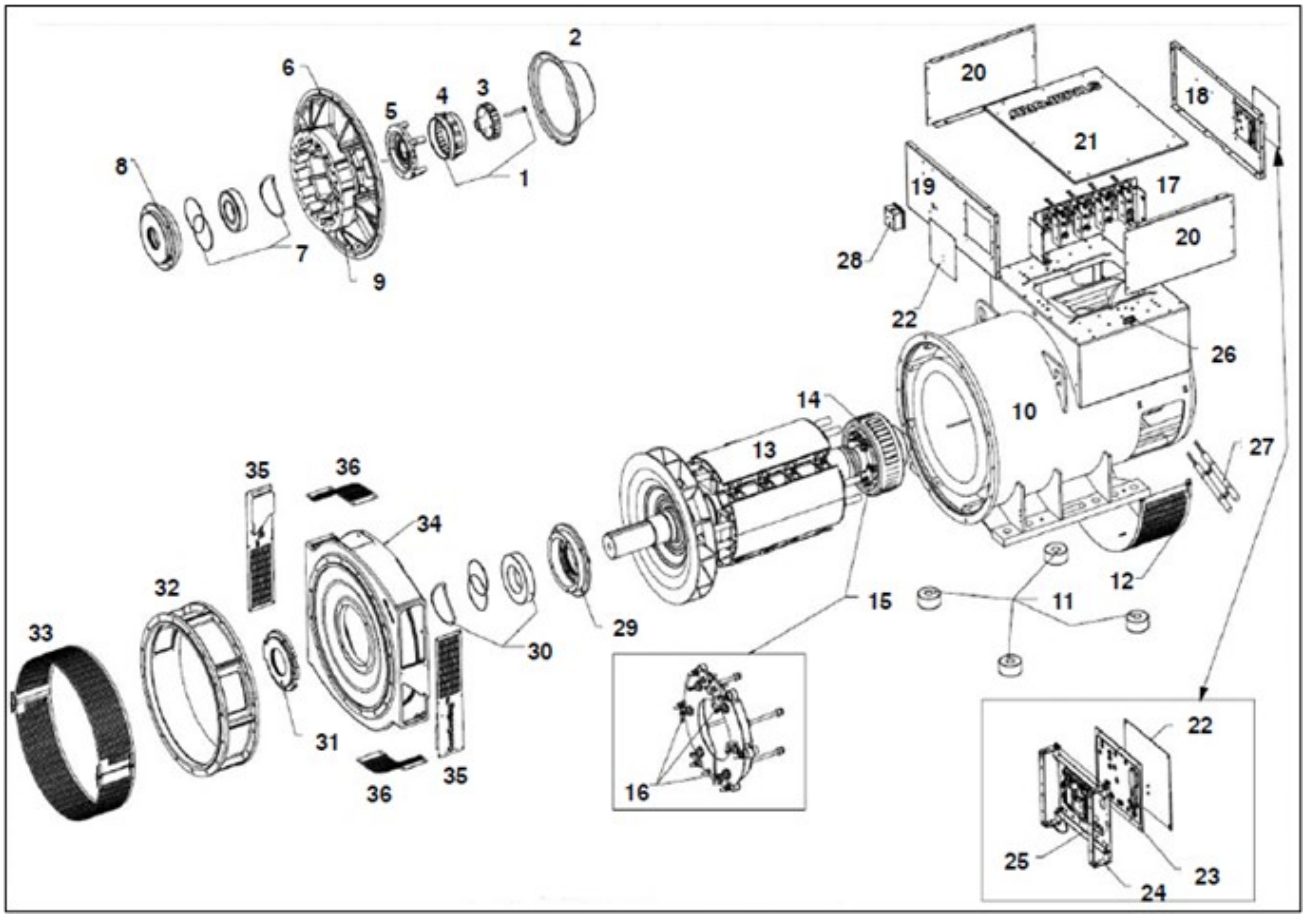

FIGURE 29. S6 (C-H) TWO BEARING (DEDICATED) ALTERNATOR PARTS DRAWING

TABLE 30. S6 (C-H) TWO BEARING (DEDICATED) ALTERNATOR PARTS LIST

Item	Part No.	Description	Qty.	Recommended Service Part	RSL Class	RSL Type
1	45-0341A	Complete PMG Upfit Kit	1	Yes	B	SC
2	760-10562	PMG Cover (Cover Included In Above Kit)	1	-	-	-
3	45-1082	PMG Rotor/Stator Repair Kit	1	Yes	A	SC
4	45-1082	PMG Rotor/Stator Repair Kit	1	Yes	A	SC
5	660-10864	NDE Bearing Cap	1	-	-	-
6	660-10860	NDE Bracket	1	-	-	-
7	45-0340	NDE Bearing Kit (Sealed)	1	Yes	B	M
8	660-10862	NDE Bearing Cartridge	1	-	-	-
9	A057B916	Exciter Stator 65 mm (C-D)	1	Yes	A	SC
9	A057B918	Exciter Stator 75 mm (E-H)	1	Yes	A	SC

 Copyright © 2025 Cummins Inc.

Item	Part No.	Description	Qty.	Recommended Service Part	RSL Class	RSL Type
10	QMSN	Main Stator Frame Assembly	1	-	-	-
11	A057L515	Foot Space	4	-	-	-
12	660-11565	NDE Air Inlet Cover (Industrial)	1	-	-	-
13	QMSN	Main Rotor Assembly	1	-	-	-
14	A057B921	Exciter Rotor 65 mm (C-D)	1	Yes	A	SC
14	A057B923	Exciter Rotor 75 mm (E-H)	1	Yes	A	SC
15	450-16025	Rotating Rectifier Assembly	1	Yes	A	SC
16	RSK-6001	Diode Forward/Reverse And Varistor Kit	1	Yes	A	SC
17	QMSN	Main Terminal Board	1	-	-	-
18	660-11604	Terminal Box End Panel NDE (Standard Digital AVR)	1	-	-	-
18	660-11682	Terminal Box End Panel NDE (EU Machine Dir.)	1	-	-	-
18	660-11689	Terminal Box End Panel NDE (Hi-Reconnectable) (EU Machine Dir.)	1	-	-	-
19	660-11681	Terminal Box End Panel DE (EU Machine Dir.)	1	-	-	-
19	660-11687	Terminal Box End Panel DE (PG Gland Or Standard Digital AVR) (EU Machine Dir.)	1	-	-	-
19	660-11688	Terminal Box End Panel DE (Hi-Reconnectable) (EU Machine Dir.)	1	-	-	-
20	660-10650	Terminal Box Side Panel	2	-	-	-
20	660-10923	Terminal Box Side Panel (Hi-Reconnectable And AF)	2	-	-	-
21	660-10651	Terminal Box Lid	1	-	-	-
22	450-16414	AVR Cover Plate (EU Machine Dir.)	1	-	-	-
22	450-16417	AVR Cover Plate (Access) (EU Machine Dir.)	1	-	-	-
23	450-16413	AVR Plastic Cover (EU Machine Dir.)	1	-	-	-
24	45-0742	AVR Mounting Bracket	1	-	-	-
25	A054S072	AVR DECS-100	1	Yes	A	SC
25	A060B914	AVR DECS-150	1	Yes	A	SC
25	A062Y338	AVR MX322	1	Yes	A	SC
25	E000-23212/1P	AVR MX321	1	Yes	A	SC

Item	Part No.	Description	Qty.	Recommended Service Part	RSL Class	RSL Type
25	E000-23215/1P	AVR MX321 UL	1	Yes	A	SC
25	E000-23408/1P	AVR MX341 UL	1	Yes	A	SC
25	E000-23412/1P	AVR MX341	1	Yes	A	SC
26	003-14055	Auxiliary Terminal Board	2	-	-	-
27	A053M968	Heater Kit 110-125 V UL Cert	1	-	-	-
27	A053N002	Heater 220-260 V UL Cert	1	-	-	-
27	A053X252	Heater Kit 110-125 V To Include Term Box For Retro UL Cert	1	-	-	-
27	A053X255	Heater Kit 220-260 V To Include Term Box For Retro UL Cert	1	-	-	-
28	45-0024	Terminal Box For Heaters	1	-	-	-
29	660-10870	DE Bearing Cartridge (G-H)	1	-	-	-
29	A057U170	DE Bearing Cartridge (C-F)	1	-	-	-
30	45-0339	DE Bearing Kit (Sealed)	1	Yes	B	M
31	660-10872	DE Bearing Cap Outer (G-H)	1	-	-	-
31	A057U174	DE Bearing Cap Outer (C-F)	1	-	-	-
32	45-0683	2 Bearing Adaptor Kit (SAE 0) 660 Fan (C-F)	1	-	-	-
32	A028B524	2 Bearing Adaptor Kit (SAE 0 + SAE 1 Ring) 660 Fan (C-F)	1	-	-	-
32	A058A533	2 Bearing Adaptor Kit SAE 00 800 Fan (G-H)	1	-	-	-
32	A058A539	2 Bearing Adaptor Kit SAE 0 800 Fan (G-H)	1	-	-	-
33	INCLUDED IN ITEM 32	DE Cover Screen (Included In Kits)	1	-	-	-
34	A059M483	DE Bracket-660 mm Fan (C-F) Kit	1	-	-	-
34	A059M485	DE Bracket-800 mm Fan (G-H) Kit	1	-	-	-
35	A056W894	DE Adaptor Side Cover 660 Fan (C-F) (Included In Item 34)	2	-	-	-
35	A057K006	DE Adaptor Side Cover 800 Fan (G-H) (Included In Item 34)	2	-	-	-
36	A056W896	DE Adaptor Top And Bottom Cover, 660 Fan (C-F) (Included In Item 34)	2	-	-	-

 Copyright © 2025 Cummins Inc.

Item	Part No.	Description	Qty.	Recommended Service Part	RSL Class	RSL Type
36	A057K009	DE Adaptor Top And Bottom Cover, 800 Fan (G-H) (Included In Item 34)	2	-	-	-
Not Shown	45-0281	Kluber Grease 400g	1	Yes	B	M
Not Shown	450-42100	2:1 Isolation Transformer	1	Yes	A	SC
Not Shown	E000-22070/P	1:1 Isolation Transformer & Bracket Assembly	1	Yes	A	SC

Copyright © 2025 Cummins Inc.

31 P7 (A-G) One Bearing Alternator

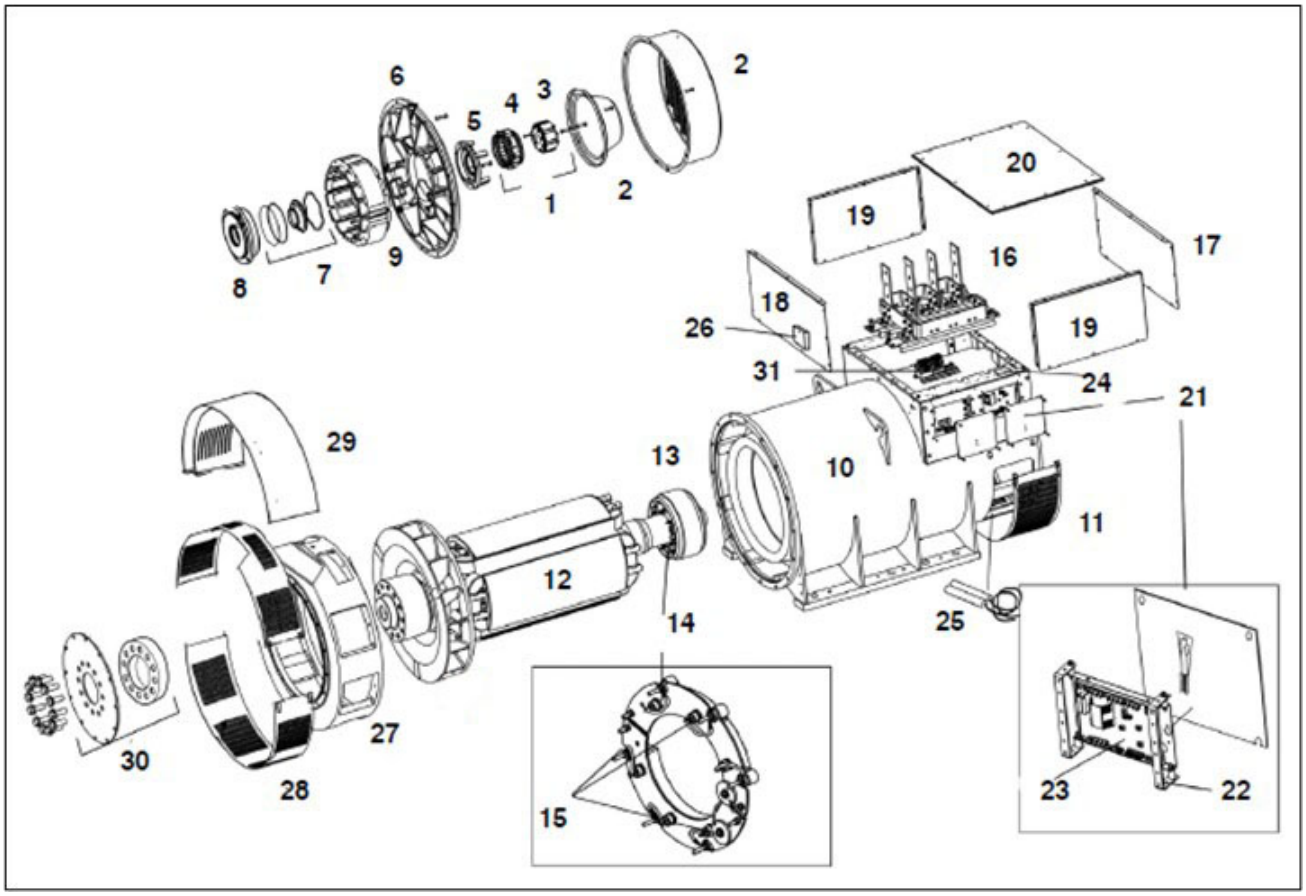

FIGURE 30. P7 (A-G) ONE BEARING ALTERNATOR PARTS DRAWING

TABLE 31. P7 (A-G) ONE BEARING ALTERNATOR PARTS LIST

Item	Part No.	Description	Qty.	Recommended Service Part	RSL Class	RSL Type
1	45-0119A	Complete PMG Upfit Kit	1	-	-	-
2	760-10562	PMG Cover (Cover Included In Above Kit)	1	-	-	-
2a	760-10965	NDE Air Inlet Cover (G) (Marine)	1	-	-	-
2a	760-11005	NDE Air Inlet Cover (Circular)	1	-	-	-
2a	760-11279	NDE Air Inlet Cover (G) Only	1	-	-	-
3	45-1082	PMG Rotor/Stator Repair Kit	1	Yes	A	SC
4	45-1082	PMG Rotor/Stator Repair Kit	1	Yes	A	SC
5	760-10823	NDE Bearing Cap	1	-	-	-
5	760-11026	NDE Bearing Cap For Use With Hardened Cartridge	1	-	-	-
6	760-10819	NDE Bracket A-F	1	-	-	-
6	760-11205	NDE Bracket (G)	1	-	-	-

 Copyright © 2025 Cummins Inc.

Item	Part No.	Description	Qty.	Recommended Service Part	RSL Class	RSL Type
7	45-0336	NDE Regrease Bearing Kit	1	Yes	B	M
7	45-0418	NDE Sealed Bearing Kit	1	Yes	B	M
7	45-1153	NDE Regrease Bearing Kit With Caps And Cartridges (A-E)	1	Yes	B	M
7	A054Y391	NDE Sealed Bearing Kit With Caps And Cartridges (A-E)	1	Yes	B	M
8	760-10821	NDE Bearing Cartridge	1	-	-	-
8	760-11016	NDE Bearing Cartridge (Hardened)	1	-	-	-
9	366-40800	Exciter Stator 75 mm (A-F)	1	Yes	A	SC
9	760-1151	Exciter Stator 100 mm (G)	1	Yes	A	SC
9	A052D957	Exciter Stator A-F (75 mm) Severe Environmental	1	Yes	A	SC
9	A052D963	Exciter Stator (G) (100 mm) Severe Environmental	1	Yes	A	SC
10	QMSN	Main Stator Frame Assembly	1	-	-	-
11	366-21200	NDE Bottom Cover (Marine - Louvered)	1	-	-	-
11	366-21300	NDE Bottom Cover (Air Filter)	1	-	-	-
11	760-11274	NDE Bottom Cover (A-F)	1	-	-	-
12	QMSN	Main Rotor Assembly	1	-	-	-
13	760-1178	Exciter Rotor 100 mm G,R,S,T	1	Yes	A	SC
13	760-1186	Exciter Rotor 75 mm (A-F)	1	Yes	A	SC
14	760-11216	Rotating Rectifier Assembly	1	Yes	A	SC
15	RSK-6001	Diode Forward/Reverse And Varistor Kit	1	Yes	A	SC
16	QMSN	Main Terminal Board	1	-	-	-
17	760-11185	Terminal Box End Panel NDE-Standard	1	-	-	-
17	760-11268	Terminal Box End Panel NDE High Box	1	-	-	-
17	760-11594	Terminal Box End Panel NDE-Standard With Air Filters	1	-	-	-
17	760-11594	Terminal Box End Panel NDE-Standard With Air Filters Marine	1	-	-	-
17	A041B941	Terminal Box End Panel NDE High With A/F (Marine)	1	-	-	-

Item	Part No.	Description	Qty.	Recommended Service Part	RSL Class	RSL Type
17	A041B941	Terminal Box End Panel NDE High With Air Filters	1	-	-	-
18	760-11185	Terminal Box End Panel DE-Standard	1	-	-	-
18	760-11185	Terminal Box End Panel DE-Standard With Air Filters	1	-	-	-
18	760-11185	Terminal Box End Panel DE-Standard With Air Filters Marine	1	-	-	-
18	760-11268	Terminal Box End Panel DE High Box	1	-	-	-
18	760-11268	Terminal Box End Panel DE High With A/F (Marine)	1	-	-	-
18	760-11268	Terminal Box End Panel DE High With Air Filters	1	-	-	-
19	760-11186	Terminal Box Side Panel-Standard	2	-	-	-
19	760-11186	Terminal Box Side Panel-Standard With Air Filter	2	-	-	-
19	760-11186	Terminal Box Side Panel-Standard With Air Filter Marine	2	-	-	-
19	760-11269	Terminal Box Side Panel-High Box	2	-	-	-
19	760-11269	Terminal Box Side Panel-High With A/F (Marine)	2	-	-	-
19	760-11269	Terminal Box Side Panel-High With Air Filter	2	-	-	-
20	760-10663	Terminal Box Lid Standard/High/Air Filter And Marine	1	-	-	-
21	450-15254	AVR Cover Plate (Access)	1	-	-	-
21	450-16413	AVR Plastic Cover (EU Machine Dir.)	1	-	-	-
21	450-16417	AVR Cover Plate (Access) (EU Machine Dir.)	1	-	-	-
22	45-0742	AVR Mounting Bracket	1	-	-	-
23	A060B914	AVR DECS-150	1	Yes	A	SC
23	A062Y338	AVR MX322	1	Yes	A	SC
23	E000-23212/1P	AVR MX321	1	Yes	A	SC
23	E000-23215/1P	AVR MX321 UL	1	Yes	A	SC
23	E000-23408/1P	AVR MX341 UL	1	Yes	A	SC
23	E000-23412/1P	AVR MX341	1	Yes	A	SC

 Copyright © 2025 Cummins Inc.

Item	Part No.	Description	Qty.	Recommended Service Part	RSL Class	RSL Type
23	E000-23800	AVR DM110	1	Yes	A	SC
24	450-15489	Auxiliary Terminal Board	1	-	-	-
25	A053M969	Heater 110-125 V UL Cert	1	-	-	-
25	A053M999	Heater Kit 110-125 V (G Core) UL Cert	1	-	-	-
25	A053N003	Heater Kit 220-260 V UL Cert	1	-	-	-
25	A053N109	Heater Kit 220-260 V (Four Heater Cartridges) UL Cert (G)	1	-	-	-
25	A053X258	Heater Kit 110-125 V To Include Term Box For Retro UL Cert	1	-	-	-
25	A053X260	Heater Kit 220-260 V To Include Term Box For Retro UL Cert	1	-	-	-
25	A053X401	Heater Kit 220-260 V (G Core) To Include Term Box For Retro UL Cert	1	-	-	-
25	A053X422	Heater Kit 110-125 V (G Core) To Include Term Box For Retro UL Cert	1	-	-	-
26	45-0024	Terminal Box For Heaters	1	-	-	-
27	45-1011	DE Adaptor Kit (SAE 0)	1	-	-	-
27	45-1012	DE Adaptor Kit (SAE 00)	1	-	-	-
28	SEE NO. 29	DE Screen (Included In Adaptor Kits)	1	-	-	-
29	45-1049	Louvre Kit SAE 00 (A-F)	1	-	-	-
29	45-1050	Louvre Kit SAE 00 (G)	1	-	-	-
29	45-1051	Louvre Kit SAE 0 (A-F)	1	-	-	-
29	45-1052	Louvre Kit SAE 0 (G)	1	-	-	-
30	45-0792	Coupling Kit SAE 18 (Standard)	1	-	-	-
30	45-0793	Coupling Kit SAE 21	1	-	-	-
30	45-0794	Coupling Kit SAE 24	1	-	-	-
30	45-1005	Coupling Kit SAE 18 (Special 12 Hole)	1	-	-	-
31	450-41650	Isolation Transformer 2.5 To 1 (500 To 600 V)	1	-	-	-
31	450-41750	Isolation Transformer 3 To 1 (601 To 720 V)	1	-	-	-
31	450-42150	Isolation Transformer 2 To 1 (Up To 480 V)	1	-	-	-

Item	Part No.	Description	Qty.	Recommended Service Part	RSL Class	RSL Type
31	450-42250	Isolation Transformer 2.5 To 1 (600 To 240 V)	1	-	-	-
31	450-42350	Isolation Transformer 3 To 1 (720 To 240 V)	1	-	-	-
31	A040L270	Isolation Transformer 2 To 1 (Up To 480 V) (UL Cert)	1	-	-	-
31	A040N063	Isolation Transformer 2.5 To 1 (600 To 240 V) (UL Cert)	1	-	-	-
31	A049N972	Isolation Transformer 3 To 1 (720 To 240 V) (UL Cert)	1	-	-	-
31	TBA	Isolation Transformer 2.5 To 1 (500 To 600 V) (UL Cert)	TBA	-	-	-
31	TBA	Isolation Transformer 3 To 1 (601 To 720 V) (UL Cert)	TBA	-	-	-

 Copyright © 2025 Cummins Inc.

This page is intentionally blank.

32 P7 (A-G) Two Bearing Alternator

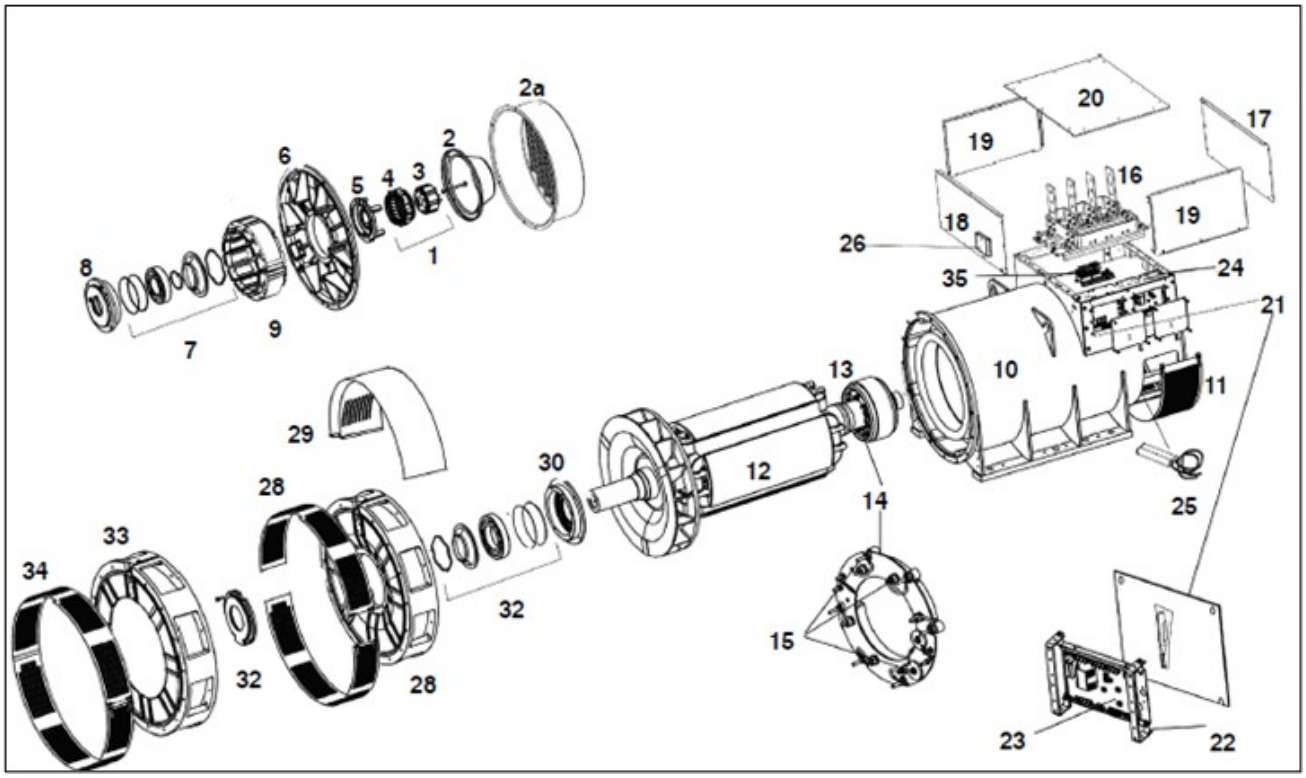

FIGURE 31. P7 (A-G) TWO BEARING ALTERNATOR PARTS DRAWING

TABLE 32. P7 (A-G) TWO BEARING ALTERNATOR PARTS LIST

Item	Part No.	Description	Qty.	Recommended Service Part	RSL Class	RSL Type
1	45-0119A	Complete PMG Upfit Kit	1	-	-	-
2	760-10562	PMG Cover (Cover Included In Above Kit)	1	-	-	-
2a	760-10965	NDE Air Inlet Cover (G) (Marine)	1	-	-	-
2a	760-11005	NDE Air Inlet Cover (Circular)	1	-	-	-
2a	760-11279	NDE Air Inlet Cover (G)	1	-	-	-
3	45-1082	PMG Rotor/Stator Repair Kit	1	Yes	A	SC
4	45-1082	PMG Rotor/Stator Repair Kit	1	Yes	A	SC
5	760-10823	NDE Bearing Cap	1	-	-	-
5	760-11026	NDE Bearing Cap For Use With Hardened Cartridge	1	-	-	-
6	760-10819	NDE Bracket A -F	1	-	-	-
6	760-11205	NDE Bracket (G)	1	-	-	-
7	45-0336	NDE Regrease Bearing Kit	1	Yes	B	M
7	45-0419	NDE Sealed Bearing Kit	1	Yes	B	M

 Copyright © 2025 Cummins Inc.

Item	Part No.	Description	Qty.	Recommended Service Part	RSL Class	RSL Type
7	45-1153	NDE Regrease Bearing Kit With Caps And Cartridges (A-E)	1	Yes	B	M
7	A054Y408	NDE Sealed Bearing Kit With Caps And Cartridges (A-E)	1	Yes	B	M
8	760-10821	NDE Bearing Cartridge	1	-	-	-
8	760-11016	NDE Bearing Cartridge (Hardened)	1	-	-	-
9	366-40800	Exciter Stator 75 mm (A-F)	1	Yes	A	SC
9	760-1151	Exciter Stator 100 mm (G)	1	Yes	A	SC
9	A052D957	Exciter Stator A-F (75 mm) Severe Environmental	1	Yes	A	SC
9	A052D963	Exciter Stator (G) (100 mm) Severe Environmental	1	Yes	A	SC
10	QMSN	Main Stator Frame Assembly	1	-	-	-
11	366-21200	NDE Bottom Cover (Marine - Louvered)	1	-	-	-
11	366-21300	NDE Bottom Cover (Air Filter) A-F	1	-	-	-
11	760-11274	NDE Bottom Cover (A-F)	1	-	-	-
12	QMSN	Main Rotor Assembly	1	-	-	-
13	760-1178	Exciter Rotor 100 mm G,R,S,T	1	Yes	A	SC
13	760-1186	Exciter Rotor 75 mm (A-F)	1	Yes	A	SC
14	760-11216	Rotating Rectifier Assembly	1	Yes	A	SC
15	RSK-6001	Diode Forward/Reverse And Varistor Kit	1	Yes	A	SC
16	QMSN	Main Terminal Board	1	-	-	-
17	760-11185	Terminal Box End Panel NDE-Standard	1	-	-	-
17	760-11268	Terminal Box End Panel NDE High Box	1	-	-	-
17	760-11594	Terminal Box End Panel NDE-Standard With Air Filters	1	-	-	-
17	760-11594	Terminal Box End Panel NDE-Standard With Air Filters Marine	1	-	-	-
17	A041B941	Terminal Box End Panel NDE High With A/F (Marine)	1	-	-	-
17	A041B941	Terminal Box End Panel NDE High With Air Filters	1	-	-	-

Item	Part No.	Description	Qty.	Recommended Service Part	RSL Class	RSL Type
18	760-11185	Terminal Box End Panel DE-Standard	1	-	-	-
18	760-11185	Terminal Box End Panel DE-Standard With Air Filters	1	-	-	-
18	760-11185	Terminal Box End Panel DE-Standard With Air Filters Marine	1	-	-	-
18	760-11268	Terminal Box End Panel DE High Box	1	-	-	-
18	760-11268	Terminal Box End Panel DE High With A/F (Marine)	1	-	-	-
18	760-11268	Terminal Box End Panel DE High With Air Filters	1	-	-	-
19	760-11186	Terminal Box Side Panel-Standard	2	-	-	-
19	760-11186	Terminal Box Side Panel-Standard With Air Filter	2	-	-	-
19	760-11186	Terminal Box Side Panel-Standard With Air Filter Marine	2	-	-	-
19	760-11269	Terminal Box Side Panel-High Box	2	-	-	-
19	760-11269	Terminal Box Side Panel-High With A/F (Marine)	2	-	-	-
19	760-11269	Terminal Box Side Panel-High With Air Filter	2	-	-	-
20	760-10663	Terminal Box Lid Standard/High/Air Filter And Marine	1	-	-	-
21	450-15254	AVR Cover Plate (Access)	1	-	-	-
21	450-16413	AVR Plastic Cover (EU Machine Dir.)	1	-	-	-
21	450-16417	AVR Cover Plate (Access) (EU Machine Dir.)	1	-	-	-
22	45-0742	AVR Mounting Bracket	1	-	-	-
23	A060B914	AVR DECS-150	1	Yes	A	SC
23	A062Y338	AVR MX322	1	Yes	A	SC
23	E000-23212/1P	AVR MX321	1	Yes	A	SC
23	E000-23215/1P	AVR MX321 UL	1	Yes	A	SC
23	E000-23408/1P	AVR MX341 UL	1	Yes	A	SC
23	E000-23412/1P	AVR MX341	1	Yes	A	SC
23	E000-23800	AVR DM110	1	Yes	A	SC
24	450-15489	Auxiliary Terminal Board	1	-	-	-

 Copyright © 2025 Cummins Inc.

Item	Part No.	Description	Qty.	Recommended Service Part	RSL Class	RSL Type
25	A053M969	Heater Kit 110-125 V UL Cert	1	-	-	-
25	A053M999	Heater Kit 110-125 V (G Core) UL Cert	1	-	-	-
25	A053N003	Heater Kit 220-260 V UL Cert	1	-	-	-
25	A053N109	Heater Kit 220-260 V (Four Heater Cartridges) UL Cert (G)	1	-	-	-
25	A053X258	Heater Kit 110-125 V To Include Term Box For Retro UL Cert	1	-	-	-
25	A053X260	Heater Kit 220-260 V To Include Term Box For Retro UL Cert	1	-	-	-
25	A053X401	Heater Kit 220-260 V (G Core) To Include Term Box For Retro UL Cert	1	-	-	-
25	A053X422	Heater Kit 110-125 V (G Core) To Include Term Box For Retro UL Cert	1	-	-	-
26	45-0024	Terminal Box For Heaters	1	-	-	-
27	760-10912	DE Bracket (F-G)	1	-	-	-
27	760-11160	DE Bracket (A-E)	1	-	-	-
28	760-10930	DE Bracket Screen Bottom	1	-	-	-
28	760-11392	DE Bracket Screen Top (Industrial)	1	-	-	-
29	45-1053	Louvre Kit (A-F)	1	-	-	-
29	45-1054	Louvre Kit (G)	1	-	-	-
30	760-10829	DE Bearing Cartridge (A-E)	1	-	-	-
30	760-10923	DE Bearing Cartridge (F-G)	1	-	-	-
31	45-0335	DE Regrease Bearing Kit (A-E)	1	Yes	B	M
31	45-0425	DE Regrease Bearing Kit (F-G)	1	Yes	B	M
31	45-1077	NDE And DE Regrease Bearing Kit Complete (A-E)	1	Yes	B	M
31	45-1078	NDE And DE Regrease Bearing Kit Complete (F-G)	1	Yes	B	M
31	45-1154	DE Regrease Bearing Kit With Caps And Cartridges (A-E)	1	Yes	B	M
31	45-1155	DE Regrease Bearing Kit With Caps And Cartridges (F-G)	1	Yes	B	M

Item	Part No.	Description	Qty.	Recommended Service Part	RSL Class	RSL Type
32	760-10831	DE Bearing Cap (A-E)	1	-	-	-
32	760-10924	DE Bearing Cap (F-G)	1	-	-	-
33	45-0715	2 Bearing Adaptor Kit SAE 00 (A-E)	1	-	-	-
33	45-0716	2 Bearing Adaptor Kit SAE 0 (A-E)	1	-	-	-
33	45-1038	2 Bearing Adaptor Kit SAE 00 (F-G)	1	-	-	-
33	A051Y983	2 Bearing Adaptor Kit SAE 0 (F-G)	1	-	-	-
34	INCLUDED IN 34	DE Cover Screen (Included In Kits)	1	-	-	-
35	450-41650	Isolation Transformer 2.5 To 1 (500 To 600 V)	1	-	-	-
35	450-41750	Isolation Transformer 3 To 1 (601 To 720 V)	1	-	-	-
35	450-42150	Isolation Transformer 2 To 1 (Up To 480 V)	1	-	-	-
35	450-42250	Isolation Transformer 2.5 To 1 (600 To 240 V)	1	-	-	-
35	450-42350	Isolation Transformer 3 To 1 (720 To 240 V)	1	-	-	-
35	A040L270	Isolation Transformer 2 To 1 (Up To 480 V) (UL Cert)	1	-	-	-
35	A040N063	Isolation Transformer 2.5 To 1 (600 To 240 V) (UL Cert)	1	-	-	-
35	A049N972	Isolation Transformer 3 To 1 (720 To 240 V) (UL Cert)	1	-	-	-
35	TBA	Isolation Transformer 2.5 To 1 (500 To 600 V) (UL Cert)	TBA	-	-	-
35	TBA	Isolation Transformer 3 To 1 (601 To 720 V) (UL Cert)	TBA	-	-	-

 Copyright © 2025 Cummins Inc.

This page is intentionally blank.

33 S7 LV One Bearing Alternator

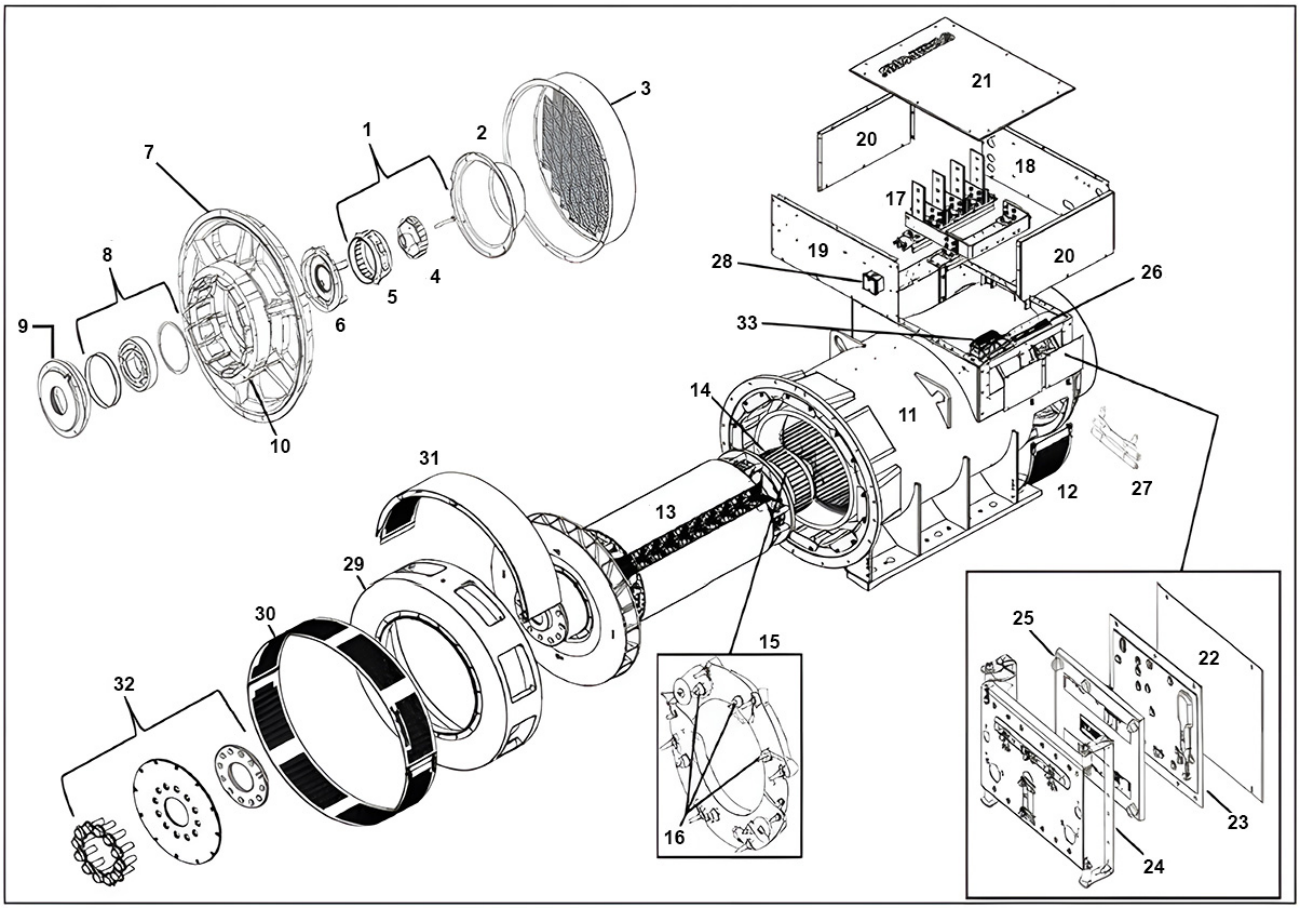

FIGURE 32. S7 LV ONE BEARING ALTERNATOR PARTS DRAWING

TABLE 33. S7 LV ONE BEARING ALTERNATOR PARTS LIST

Item	Part No.	Description	Qty.	Recommended Service Part	RSL Class	RSL Type
1	45-0119A	Complete PMG Upfit Kit	1	-	-	-
2	760-10562	PMG Cover	1	-	-	-
3	760-10965	NDE Air Inlet Cover (J) Marine	1	-	-	-
3	760-11005	NDE Air Inlet Cover (J) (Circular)	1	-	-	-
3	760-11279	NDE Air Inlet Cover (J)	1	-	-	-
3	A067S592	NDE Air Inlet Mesh Cover (K)	1	-	-	-
3	A067U584	NDE Air Inlet Louvre Cover (K)	1	-	-	-
4	45-1082	PMG Rotor/Stator Repair Kit	1	Yes	A	SC
5	45-1082	PMG Rotor/Stator Repair Kit	1	Yes	A	SC
6	760-10823	NDE Bearing Cap (C-J)	1	-	-	-

 Copyright © 2025 Cummins Inc.

Item	Part No.	Description	Qty.	Recommended Service Part	RSL Class	RSL Type
6	760-11026	NDE Bearing Cap For Use With Hardened Cartridge	1	-	-	-
6	A067S063	NDE Bearing Cap (K)	1	-	-	-
7	760-10819	NDE Bracket (C-H)	1	-	-	-
7	760-11205	NDE Bracket (J)	1	-	-	-
7	A065H305	NDE Bracket (K)	1	-	-	-
8	45-0336	NDE Regrease Bearing Kit (C-J)	1	Yes	B	M
8	45-0418	NDE Sealed Bearing Kit	1	Yes	B	M
8	45-0407	NDE Regrease Bearing Kit (K)	1	Yes	B	M
8	45-1153	NDE Regrease Bearing Kit With Caps And Cartridges (C-J)	1	Yes	B	M
8	A054Y391	NDE Sealed Bearing Kit With Caps And Cartridges	1	Yes	B	M
8	A074U518	NDE Regrease Bearing Kit With Caps And Cartridges (K)	1	Yes	B	M
9	760-10821	NDE Bearing Cartridge (C-J)	1	-	-	-
9	760-11016	NDE Bearing Cartridge (Hardened)	1	-	-	-
9	A067S066	NDE Bearing Cartridge (K)	1	-	-	-
10	366-15300	Exciter Stator 100 mm (H-J)	1	Yes	A	SC
10	A061L567	Exciter Stator 75 mm (C-G)	1	Yes	A	SC
10	A063V195	Exciter Stator 125 mm (K)	1	Yes	A	SC
11	QMSN	Main Stator Frame Assembly	1	-	-	-
12	366-21200	NDE Bottom Cover (Marine - Louvered)	1	-	-	-
12	366-21300	NDE Bottom Cover (Air Filter)	1	-	-	-
12	760-11274	NDE Bottom Cover	1	-	-	-
13	QMSN	Main Rotor Assembly	1	-	-	-
14	760-1178	Exciter Rotor 100 mm (H-J)	1	Yes	A	SC
14	760-1186	Exciter Rotor 75 mm (C-G)	1	Yes	A	SC
14	A065U425	Exciter Rotor 125 mm (K)	1	Yes	A	SC
15	760-11216	Rotating Rectifier Assembly	1	Yes	A	SC
16	RSK-6001	Diode Forward/Reverse And Varistor Kit	1	Yes	A	SC
17	QMSN	Main Terminal Board	1	-	-	-

Item	Part No.	Description	Qty.	Recommended Service Part	RSL Class	RSL Type
18	760-11185	Terminal Box End Panel NDE-Standard	1	-	-	-
18	760-11268	Terminal Box End Panel NDE-High Box	1	-	-	-
18	760-11594	Terminal Box End Panel NDE-Standard With Air Filter	1	-	-	-
18	760-11594	Terminal Box End Panel NDE-Standard With Air Filter Marine	1	-	-	-
18	A041B941	Terminal Box End Panel NDE High With Air Filter	1	-	-	-
18	A041B941	Terminal Box End Panel NDE High With Air Filter Marine	1	-	-	-
18	A062Z045	Terminal Box End Panel NDE-High Box 500 mm	1	-	-	-
19	760-11185	Terminal Box End Panel DE-Standard	1	-	-	-
19	760-11185	Terminal Box End Panel DE-Standard With Air Filter	1	-	-	-
19	760-11185	Terminal Box End Panel DE-Standard With Air Filter Marine	1	-	-	-
19	760-11268	Terminal Box End Panel DE-High Box	1	-	-	-
19	760-11268	Terminal Box End Panel DE-High With Air Filter Marine	1	-	-	-
19	760-11268	Terminal Box End Panel DE-High With Air Filter	1	-	-	-
19	A062Z045	Terminal Box End Panel DE-Extra-High Box 500 mm	1	-	-	-
20	760-11186	Terminal Box Side Panel-Standard	2	-	-	-
20	760-11186	Terminal Box Side Panel-Standard With Air Filter	2	-	-	-
20	760-11186	Terminal Box Side Panel-Standard With Air Filter Marine	2	-	-	-
20	760-11269	Terminal Box Side Panel-High Box	2	-	-	-
20	760-11269	Terminal Box Side Panel-High With Air Filter	2	-	-	-
20	760-11269	Terminal Box Side Panel-High With Air Filter Marine	2	-	-	-

 Copyright © 2025 Cummins Inc.

Item	Part No.	Description	Qty.	Recommended Service Part	RSL Class	RSL Type
20	A062Z046	Terminal Box Side Panel-Extra High Box 500 mm	2	-	-	-
21	760-10663	Terminal Box Lid Standard/High/Air Filter And Marine	1	-	-	-
22	450-15254	AVR Cover Plate (Access)	1	-	-	-
22	450-16417	AVR Cover Plate (Access) (EU Machine Dir.)	1	-	-	-
23	450-16413	AVR Plastic Cover (EU Machine Dir.)	1	-	-	-
24	45-0742	AVR Mounting Bracket	1	-	-	-
25	A062Y338	AVR MX322	1	Yes	A	SC
25	E000-23408/1P	AVR MX341 UL	1	Yes	A	SC
25	E000-23412/1P	AVR MX341	1	Yes	A	SC
25	E000-23800	AVR DM110	1	Yes	A	SC
25	A060B914	AVR DECS-150	1	Yes	A	SC
26	450-15489	Auxiliary Terminal Board	1	-	-	-
27	A053M969	Heater 110-125 V UL Cert	1	-	-	-
27	A053M999	Heater Kit 110-125 V (Four Heater Cartridges) UL Cert	1	-	-	-
27	A053N003	Heater Kit 220-260 V UL Cert	1	-	-	-
27	A053N109	Heater Kit 220-260 V (Four Heater Cartridges) UL Cert	1	-	-	-
27	A053X258	Heater Kit 110-125 V To Include Term Box For Retro UL Cert	1	-	-	-
27	A053X260	Heater Kit 220-260 V To Include Term Box For Retro UL Cert	1	-	-	-
27	A053X401	Heater Kit 220-260 V (Four Heater Cartridges) To Inc Term Box For Retro UL	1	-	-	-
27	A053X422	Heater Kit 110-125 V (Four Heater Cartridges) To Inc Item Box For Retro UL	1	-	-	-
28	45-0024	Terminal Box For Heaters	1	-	-	-
29	A062G747	DE Adaptor Kit (SAE 0) (C)	1	-	-	-
29	A062G770	DE Adaptor Kit (SAE 0) (D-H)	1	-	-	-
29	A062G782	DE Adaptor Kit (SAE 00) (C-H)	1	-	-	-
29	A062G795	DE Adaptor Kit (SAE 0) (J)	1	-	-	-

Item	Part No.	Description	Qty.	Recommended Service Part	RSL Class	RSL Type
29	A062G809	DE Adaptor kit (SAE 00) (J)	1	-	-	-
30	See No.29	DE Screen (Included In Adaptor Kits)	1	-	-	-
31	45-1049	Louvre Kit SAE 00 (C-H)	1	-	-	-
31	45-1050	Louvre Kit SAE 00 (J)	1	-	-	-
31	45-1051	Louvre Kit SAE 0 (C-H)	1	-	-	-
31	45-1052	Louvre Kit SAE 0 (J)	1	-	-	-
32	45-0792	Coupling Kit SAE 18 (Standard)	1	-	-	-
32	45-0793	Coupling Kit SAE 21	1	-	-	-
32	45-0794	Coupling Kit SAE 24	1	-	-	-
32	45-1005	Coupling Kit SAE 18 (Special 12 Hole)	1	-	-	-
32	A061X995	Coupling Kit SAE 18 (J)	1	-	-	-
32	A061X997	Coupling Kit SAE 21 (J)	1	-	-	-
33	450-41650	Isolation Transformer 2 To 1 (600 To 240 V)	1	-	-	-
33	450-41750	Isolation Transformer 3 to 1 (720 to 240 V)	1	-	-	-
33	450-42150	Isolation Transformer 2 To 1 (Up To 480 V)	1	-	-	-
33	A040L270	Isolation Transformer 2 To 1 (480 To 240 V) (UL Cert)	1	-	-	-
33	A040N063	Isolation Transformer 2.5 To 1 (600 To 240 V) (UL Cert)	1	-	-	-
33	A049N972	Isolation Transformer 3 To 1 (720 To 240 V) (UL Cert)	1	-	-	-
Not Shown	45-0281	Kluber Grease 400g	1	Yes	B	M

 Copyright © 2025 Cummins Inc.

This page is intentionally blank.

34 S7 LV Two Bearing Alternator

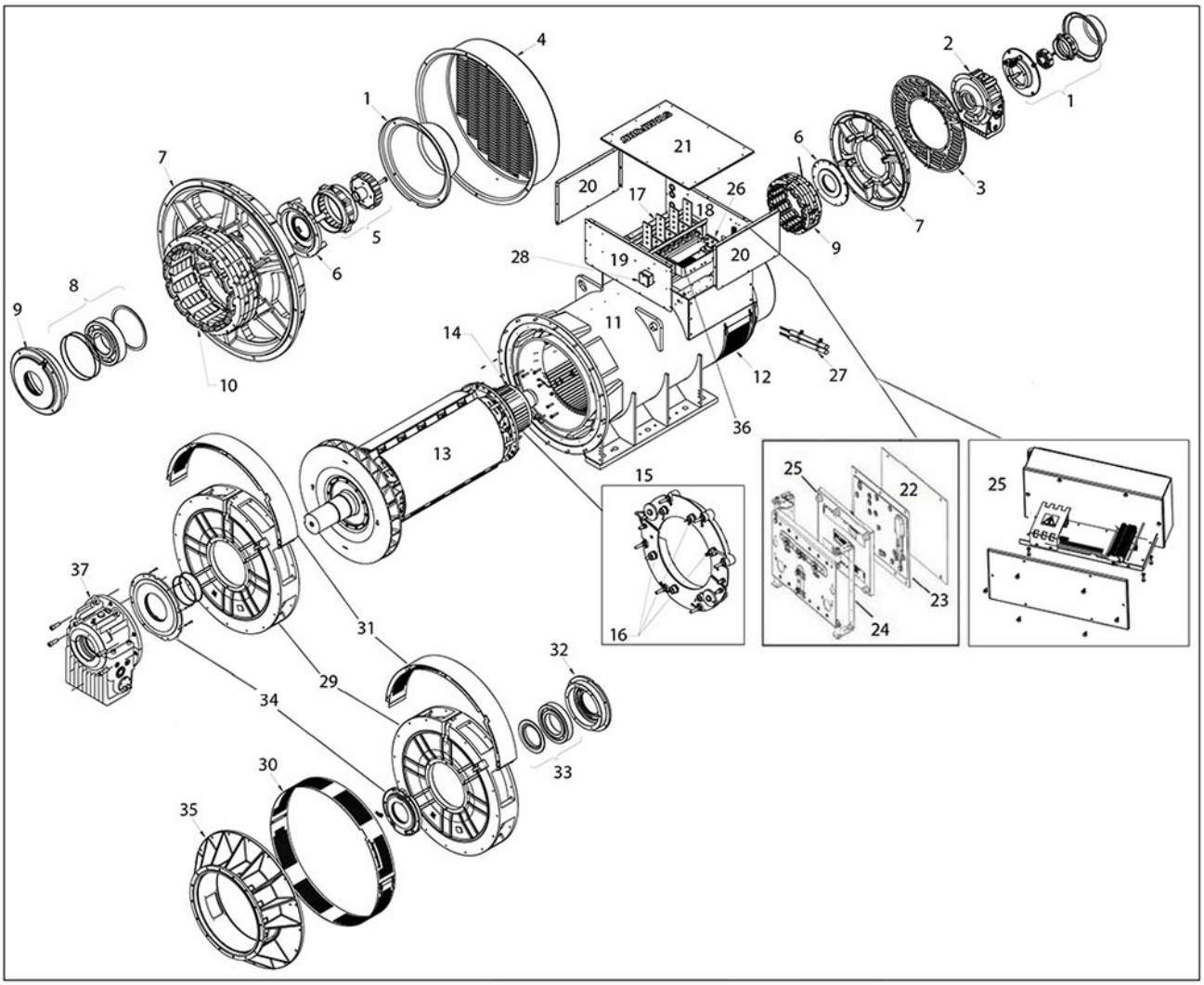

FIGURE 33. S7 LV TWO BEARING ALTERNATOR PARTS DRAWING

TABLE 34. S7 LV TWO BEARING ALTERNATOR PARTS LIST

Item	Part No.	Description	Qty.	Recommended Service Part	RSL Class	RSL Type
1	760-10562	PMG Cover	1	-	-	-
1	A065W008	PMG Stator Mount (Non-Drive End Sleeve Bearing Face)	1	-	-	-
1	A067R585	Complete PMG Repair Kit-Sleeve Bearing Frame	1	Yes	A	SC
2	A065X336	Sleeve Bearing Non-Drive End (D, E, F, J)	1	-	-	-
2	A067T912	NDE Sleeve Bearing Drain Plug	1	Yes	C	M

 Copyright © 2025 Cummins Inc.

Item	Part No.	Description	Qty.	Recommended Service Part	RSL Class	RSL Type
2	A067T920	NDE Sleeve Bearing Shell	1	Yes	B	M
2	A067T927	NDE Sleeve Bearing Labyrinth Seal	1	Yes	B	M
2	A067T942	NDE Sleeve Bearing Oil Ring	1	Yes	B	M
2	A072J784	NDE Sleeve Bearing Top Oil Sight Glass G1	1	Yes	C	M
2	A072J788	NDE Sleeve Bearing Oil Sight Glass G1 1/4	1	Yes	C	M
3	A077T884	NDE Cover - Louver (Top Right From DE)	1	-	-	-
3	A077T885	NDE Cover - Louver (Bottom Right From DE)	1	-	-	-
3	A077T886	NDE Cover - Louver (Top Left From DE)	1	-	-	-
3	A077T887	NDE Cover - Louver (Bottom Left From DE)	1	-	-	-
3	A078N313	NDE Cover (Top) - Sealed	2	-	-	-
3	A078N314	NDE Cover (Bottom) - Sealed	2	-	-	-
4	760-10965	NDE Air Inlet Cover (J) Marine	1	-	-	-
4	760-11005	NDE Air Inlet Cover (J) (Circular)	1	-	-	-
4	760-11279	NDE Air Inlet Cover (J)	1	-	-	-
4	A067S592	NDE Air Inlet Mesh Cover (K)	1	-	-	-
4	A067U584	NDE Air Inlet Louvre Cover (K)	1	-	-	-
5	45-1082	PMG Rotor/Stator Repair Kit	1	Yes	A	SC
6	760-10823	NDE Bearing Cap (C-J)	1	-	-	-
6	760-11026	NDE Bearing Cap For Use With Hardened Cartridge	1	-	-	-
6	A065K478	NDE Sleeve Bearing Cap	1	-	-	-
6	A067S063	NDE Bearing Cap (K)	1	-	-	-
7	760-10819	NDE Bracket (C-H)	1	-	-	-
7	760-11205	NDE Bracket (J)	1	-	-	-
7	A065H305	NDE Bracket (K)	1	-	-	-
8	45-0336	NDE Regrease Bearing Kit (C-J)	1	Yes	B	M
8	45-0419	NDE Sealed Bearing Kit	1	Yes	B	M
8	45-0407	NDE Regrease Bearing Kit (K)	1	Yes	B	M

Copyright © 2025 Cummins Inc.

Item	Part No.	Description	Qty.	Recommended Service Part	RSL Class	RSL Type
8	45-1153	NDE Regrease Bearing Kit With Caps And Cartridges (D, H, J)	1	Yes	B	M
8	A074U518	NDE Regrease Bearing Kit With Caps And Cartridges (K)	1	Yes	B	M
9	760-10821	NDE Bearing Cartridge (C-J)	1	-	-	-
9	760-11016	NDE Bearing Cartridge (Hardened)	1	-	-	-
9	A067S066	NDE Bearing Cartridge (K)	1	-	-	-
10	366-15300	Exciter Stator 100 mm (H-J)	1	Yes	A	SC
10	A061L567	Exciter Stator 75 mm (C-G)	1	Yes	A	SC
10	A063V195	Exciter Stator 125 mm (K)	1	Yes	A	SC
11	QMSN	Main Stator Frame Assembly	1	-	-	-
12	366-21200	NDE Bottom Cover (Marine - Louvered)	1	-	-	-
12	366-21300	NDE Bottom Cover (Air Filter)	1	-	-	-
12	760-11274	NDE Bottom Cover	1	-	-	-
13	QMSN	Main Rotor Assembly	1	-	-	-
14	760-1178	Exciter Rotor 100 mm (H-J)	1	Yes	A	SC
14	760-1186	Exciter Rotor 75mm (C-G)	1	Yes	A	SC
14	A065U425	Exciter Rotor 125 mm (K)	1	Yes	A	SC
15	760-11216	Rotating Rectifier Assembly	1	Yes	A	SC
16	RSK-6001	Diode Forward/Reverse And Varistor Kit	1	Yes	A	SC
17	QMSN	Main Terminal Board	1	-	-	-
18	760-11185	Terminal Box End Panel DE-Standard	1	-	-	-
18	760-11268	Terminal Box End Panel NDE - High Box	1	-	-	-
18	760-11594	Terminal Box End Panel NDE - Standard With Air Filter	1	-	-	-
18	760-11594	Terminal Box End Panel NDE -Standard With Air Filter Marine	1	-	-	-
18	A041B941	Terminal Box End Panel NDE High With Air Filter	1	-	-	-
18	A041B941	Terminal Box End Panel NDE High With Air Filter Marine	1	-	-	-

 Copyright © 2025 Cummins Inc.

Item	Part No.	Description	Qty.	Recommended Service Part	RSL Class	RSL Type
18	A062Z045	Terminal Box End Panel NDE-Extra-High Box 500 mm	1	-	-	-
19	760-11185	Terminal Box End Panel DE-Standard	1	-	-	-
19	760-11185	Terminal Box End Panel DE-Standard With Air Filter Marine	1	-	-	-
19	760-11185	Terminal Box End Panel DE-Standard With Air Filter Marine	1	-	-	-
19	760-11268	Terminal Box End Panel DE-High Box	1	-	-	-
19	760-11268	Terminal Box End Panel DE-High With Air Filter Marine	1	-	-	-
19	760-11268	Terminal Box End Panel DE-High With Air Filter	1	-	-	-
19	A062Z045	Terminal Box End Panel DE-Extra-High Box 500 mm	1	-	-	-
20	760-11186	Terminal Box Side Panel-Standard	2	-	-	-
20	760-11186	Terminal Box Side Panel-Standard With Air Filter	2	-	-	-
20	760-11186	Terminal Box Side Panel-Standard With Air Filter Marine	2	-	-	-
20	760-11269	Terminal Box Side Panel-High Box	2	-	-	-
20	760-11269	Terminal Box Side Panel-High With Air Filter	2	-	-	-
20	760-11269	Terminal Box Side Panel-High With Air Filter Marine	2	-	-	-
20	A062Z046	Terminal Box Side Panel-Extra High Box 500 mm	2	-	-	-
21	760-10663	Terminal Box Lid Standard/High/Air Filter And Marine	1	-	-	-
22	450-15254	AVR Cover Plate (Access)	1	-	-	-
22	450-16417	AVR Cover Plate (Access) (EU Machine Dir.)	1	-	-	-
23	450-16413	AVR Plastic Cover (EU Machine Dir.)	1	-	-	-
24	45-0742	AVR Mounting Bracket	1	-	-	-
25	A060B914	AVR DECS-150	1	Yes	A	SC
25	A062Y338	AVR MX322	1	Yes	A	SC

Item	Part No.	Description	Qty.	Recommended Service Part	RSL Class	RSL Type
25	E000-23408/1P	AVR MX341 UL	1	Yes	A	SC
25	E000-23412/1P	AVR MX341	1	Yes	A	SC
25	E000-23800	AVR DM110	1	Yes	A	SC
26	450-15489	Auxiliary Terminal Board	1	-	-	-
27	A053M969	Heater Kit 110-125 V UL Cert	1	-	-	-
27	A053M999	Heater Kit 110-125 V (Four Heater Cartridges) UL Cert	1	-	-	-
27	A053N003	Heater Kit 220-260 V UL Cert	1	-	-	-
27	A053N109	Heater Kit 220-260 V (Four Heater Cartridges) UL Cert	1	-	-	-
27	A053X258	Heater Kit 110-125 V To Include Term Box For Retro UL Cert	1	-	-	-
27	A053X260	Heater Kit 220-260 V To Include Term Box For Retro UL Cert	1	-	-	-
27	A053X401	Heater Kit 220-260 V (Four Heater Cartridges) To Inc Term Box For Retro UL	1	-	-	-
27	A053X422	Heater Kit 110-125 V (Four Heater Cartridges) To Inc Item Box For Retro UL	1	-	-	-
28	45-0024	Terminal Box For Heaters	1	-	-	-
29	760-10912	DE Bracket (G-H)	1	-	-	-
29	760-11160	DE Bracket (C-F)	1	-	-	-
29	A050V498	DE Bracket (J)	1	-	-	-
29	A065G884	Sleeve Bearing Drive End Bracket (J)	1	-	-	-
29	A065L159	Sleeve Bearing Drive End Bracket (D, E, F)	1	-	-	-
30	760-10930	DE Bracket Screen Bottom (C-H)	1	-	-	-
30	A051A780	DE Bracket Screen Bottom (J)	1	-	-	-
30	A060W457	DE Bracket Screen Top (Industrial) (J)	1	-	-	-
30	A060W997	DE Bracket Screen Top (Industrial) (C-H)	1	-	-	-
31	45-1053	Louvre Kit (C-H)	1	-	-	-
31	45-1054	Louvre Kit (J)	1	-	-	-
32	760-10829	DE Bearing Cartridge (C-F)	1	-	-	-
32	760-10923	DE Bearing Cartridge (G-K)	1	-	-	-

 Copyright © 2025 Cummins Inc.

Item	Part No.	Description	Qty.	Recommended Service Part	RSL Class	RSL Type
33	45-0335	DE Regrease Bearing Kit (C-F)	1	Yes	B	M
33	45-0425	DE Regrease Bearing Kit (G-K)	1	Yes	B	M
33	45-1077	NDE And DE Regrease Bearing. Kit Complete (C-F)	1	Yes	B	M
33	45-1078	NDE And DE Regrease Bearing Kit Complete (G-J)	1	Yes	B	M
33	45-1154	D.E Regrease Bearing Kit With Caps And Cartridges (C- F)	1	Yes	B	M
33	45-1155	DE Regrease Bearing Kit With Caps And Cartridges (G-K)	1	Yes	B	M
33	A074U997	NDE And DE Regrease Bearing Kit Complete (K)	1	Yes	B	M
34	760-10831	DE Bearing Cap (C-F)	1	-	-	-
34	760-10924	DE Bearing Cap (G-K)	1	-	-	-
34	A065K301	Sleeve Bearing DE Cap	1	-	-	-
35	45-0715	2 Bearing Adaptor Kit SAE 00 (C-F)	1	-	-	-
35	45-0716	2 Bearing Adaptor Kit SAE 0 (C-F)	1	-	-	-
35	45-1038	2 Bearing Adaptor Kit SAE 00 (G-H)	1	-	-	-
35	A046C895	2 Bearing Adaptor Kit SAE 0 (J)	1	-	-	-
35	A051Y983	2 Bearing Adaptor Kit SAE 0 (G-H)	1	-	-	-
35	A054Y386	2 Bearing Adaptor Kit SAE 00 (J)	1	-	-	-
36	450-41650	Isolation Transformer 2 To 1 (600 To 240 V)	1	-	-	-
36	450-41750	Isolation Transformer 3 to 1 (720 to 240 V)	1	-	-	-
36	450-42150	Isolation transformer 2 to 1 (480 to 240 V)	1	-	-	-
36	A040L270	Isolation Transformer 2 To 1 (480 To 240 V) (UL Cert)	1	-	-	-
36	A040N063	Isolation Transformer 2.5 To 1 (600 To 240 V) (UL Cert)	1	-	-	-
36	A049N972	Isolation Transformer 3 To 1 (720 To 240 V) (UL Cert)	1	-	-	-
37	A065K516	DE Sleeve Bearing	1	-	-	-

Item	Part No.	Description	Qty.	Recommended Service Part	RSL Class	RSL Type
37	A067T658	DE Bearing Shell	1	Yes	B	M
37	A067T867	DE Labyrinth Seal	1	Yes	B	M
37	A067T907	DE Oil Ring	1	Yes	B	M
37	A067T912	DE Drain Plug	1	Yes	C	M
37	A072J786	DE Oil Sight Glass G1 1/2-Sk 33 L	1	Yes	C	M
37	A072J787	DE Top Oil Sight Glass G1 1/2	1	Yes	C	M
Not Shown	45-0281	Kluber Grease 400g	1	Yes	B	M

 Copyright © 2025 Cummins Inc.

This page is intentionally blank.

35 S7 WLV Two Bearing Alternator

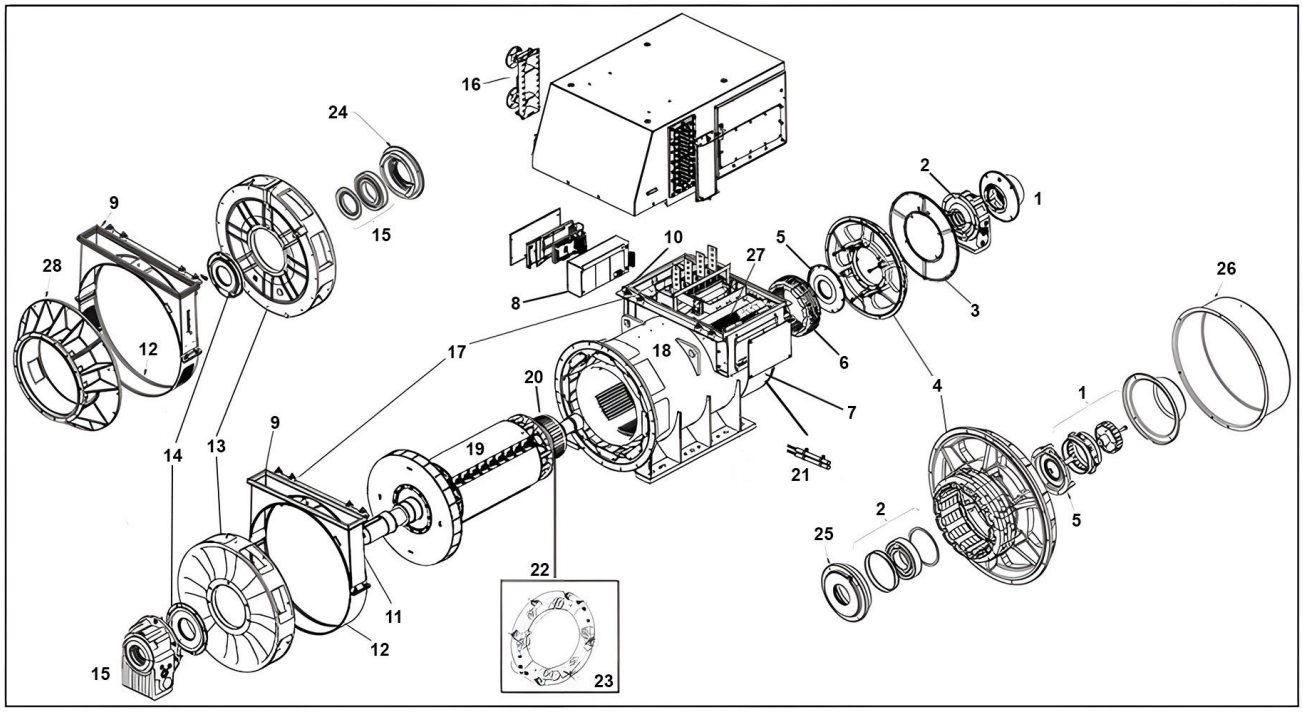

FIGURE 34. S7 WLV TWO BEARING ALTERNATOR PARTS DRAWING

TABLE 35. S7 WLV TWO BEARING ALTERNATOR PARTS LIST

Item	Part No.	Description	Qty.	Recommended Service Part	RSL Class	RSL Type
1	45-1082	PMG Rotor/Stator Repair Kit	1	Yes	A	SC
1	760-10562	PMG Cover End	1	-	-	-
1	A065W008	PMG Stator Mount (Non-Drive End Sleeve Bearing Face)	1	-	-	-
1	A067R585	Complete PMG Repair Kit-Sleeve Bearing Frame	1	Yes	A	SC
2	45-0336	NDE Regrease Bearing Kit	1	Yes	B	M
2	45-1153	NDE Regrease Bearing Kit With Caps And Cartridges	1	Yes	B	M
2	A065X336	Sleeve Bearing Non-Drive End (D, E, F, J)	1	-	-	-
2	A067T912	NDE Sleeve Bearing Drain Plug	1	Yes	C	M
2	A067T920	NDE Sleeve Bearing Shell	1	Yes	B	M
2	A067T927	NDE Sleeve Bearing Labyrinth Seal	1	Yes	B	M
2	A067T942	NDE Sleeve Bearing Oil Ring	1	Yes	B	M

 Copyright © 2025 Cummins Inc.

Item	Part No.	Description	Qty.	Recommended Service Part	RSL Class	RSL Type
2	A072J784	NDE Sleeve Bearing Top Oil Sight Glass G1	1	Yes	C	M
2	A072J788	NDE Sleeve Bearing Oil Sight Glass G1 1/4	1	Yes	C	M
3	A065L739	End Cover (D, E, F, J)	2	-	-	-
3	A078N313	NDE Cover (Top) - Sealed For Water Cooling	2	-	-	-
3	A078N314	NDE Cover (Bottom) - Sealed For Water Cooling	2	-	-	-
4	760-10819	NDE Bracket (C-H)	1	-	-	-
4	760-11205	NDE Bracket (J)	1	-	-	-
4	A065H305	Sleeve Bearing NDE Bracket	1	-	-	-
5	760-10823	NDE Rolling Element Bearing Cap	1	-	-	-
5	760-11026	NDE Rolling Element Bearing Cap With Hardened Cartridge	1	-	-	-
5	A065K478	NDE Sleeve Bearing Cap	1	-	-	-
6	366-15300	Exciter Stator (J)	1	Yes	A	SC
6	A061L567	Exciter Stator 75 mm (C-G)	1	Yes	A	SC
6	A061Y737	Taped VPI Exciter Stator (J)	1	Yes	A	SC
6	A061Y735	Taped VPI Exciter Stator (C-G)	1	Yes	A	SC
7	366-21300	NDE Bottom Cover (Air Filter) (D, E, F, J)	1	-	-	-
8	A060B914	AVR DECS-150	1	Yes	A	SC
8	A062Y338	AVR MX322	1	Yes	A	SC
8	E000-23800	AVR DM110	1	Yes	A	SC
9	A066C516	Heat Exchanger Gasket Seal	1	Yes	B	M
9	A066C517	Heat Exchanger Gasket Seal	1	Yes	B	M
10	A066C518	Heat Exchanger Gasket Seal	1	Yes	B	M
11	A065H096	DE Adaptor Top Cover Air Duct (J)	1	-	-	-
11	A065Y020	DE Adaptor Top Cover Air Duct (D, E, F)	1	-	-	-
12	A065H090	DE Adaptor Bottom Cover (D, E, F, J)	1	-	-	-
13	760-10912	Rolling Element Bearing DE Bracket (G-H)	1	-	-	-
13	760-11160	Rolling Element Bearing DE Bracket (C-F)	1	-	-	-

Item	Part No.	Description	Qty.	Recommended Service Part	RSL Class	RSL Type
13	A050V498	Rolling Element Bearing DE Bracket (J)	1	-	-	-
13	A065G884	Sleeve Bearing Drive End Bracket (J)	1	-	-	-
13	A065L159	Sleeve Bearing Drive End Bracket (D, E, F)	1	-	-	-
14	760-10831	DE Bearing Cap (Rolling Element Bearing) (C-F)	1	-	-	-
14	760-10924	DE Bearing Cap-Rolling Element Bearing (G-J)	1	-	-	-
14	A065K301	DE Sleeve Bearing Cap	1	-	-	-
15	45-0335	DE Regrease Bearing Kit	1	Yes	B	M
15	45-0425	DE Regrease Bearing Kit (G-J)	1	Yes	B	M
15	45-1077	NDE And DE Regrease Bearing. Kit Complete (C-F)	1	Yes	B	M
15	45-1078	NDE And DE Regrease Bearing Kit Complete (G-J)	1	Yes	B	M
15	45-1154	DE Regrease Bearing Kit With Caps And Cartridges (C-F)	1	Yes	B	M
15	45-1155	DE Regrease Bearing Kit With Caps And Cartridges (G-J)	1	Yes	B	M
15	A065K516	DE Sleeve Bearing	1	-	-	-
15	A067T658	DE Bearing Shell	1	Yes	B	M
15	A067T867	DE Labyrinth Seal	1	Yes	B	M
15	A067T907	DE Oil Ring	1	Yes	B	M
15	A067T912	DE Drain Plug	1	Yes	C	M
15	A072J786	DE Oil Sight Glass G1 1/2-Sk 33 L	1	Yes	C	M
15	A072J787	DE Top Oil Sight Glass G1 1/2	1	Yes	C	M
16	A065R295	Heat Exchanger Right Hand (J)	1	-	-	-
16	A065X999	Heat Exchanger Left Hand (J)	1	-	-	-
16	A065X999	Heat Exchanger Left Hand-(D, E, F)	1	-	-	-
16	A065Y000	Heat Exchanger Right Hand (D, E, F)	1	-	-	-
17	A065X995	Anti-Vibration Mount	8	Yes	B	M
18	QMSN	Main Stator Frame Assembly	1	-	-	-

 Copyright © 2025 Cummins Inc.

Item	Part No.	Description	Qty.	Recommended Service Part	RSL Class	RSL Type
19	QMSN	Main Rotor Assembly	1	-	-	-
20	760-1178	Exciter Rotor 100 mm (J)	1	Yes	A	SC
20	760-1186	Exciter Rotor 75 mm (D-F)	1	Yes	A	SC
20	A065U425	Exciter Rotor 125 mm 4P (K) and 6P (J)	1	Yes	A	SC
21	45-0024	Terminal Box For Heaters	1	-	-	-
21	A053M969	Heater 110-125 V UL Cert	1	-	-	-
21	A053M999	Heater Kit 110-125 V (Four Heater Cartridges) UL Cert	1	-	-	-
21	A053N003	Heater 220-260 V UL Cert	1	-	-	-
21	A053N109	Heater Kit 220-260 V (Four Heater Cartridges) UL Cert	1	-	-	-
21	A053X258	Heater Kit 110-125 V To Include Term Box For Retro UL Cert	1	-	-	-
21	A053X260	Heater Kit 220-260 V To Include Term Box For Retro UL Cert	1	-	-	-
21	A053X401	Heater Kit 220-260 V (Four Heater Cartridges) To Inc Term Box For Retro UL	1	-	-	-
21	A053X422	Heater Kit 110-125 V (Four Heater Cartridges) To Inc Item Box For Retro UL	1	-	-	-
22	760-11216	Rotating Rectifier Assembly	1	Yes	A	SC
23	RSK-6001	Diode Forward/Reverse And Varistor Kit	1	Yes	A	SC
24	760-10829	DE Bearing Cartridge (C-F)	1	-	-	-
24	760-10923	DE Bearing Cartridge (G-J)	1	-	-	-
25	760-10821	NDE Bearing Cartridge	1	-	-	-
25	760-11016	NDE Bearing Cartridge (Hardened)	1	-	-	-
26	760-10965	NDE Air Inlet Cover (J) Marine	1	-	-	-
26	760-11005	NDE Air Inlet Cover (J) (Circular)	1	-	-	-
26	760-11279	NDE Air Inlet Cover (J)	1	-	-	-
27	450-41650	Isolation Transformer 2 To 1 (600 To 240 V)	1	-	-	-
27	450-41750	Isolation Transformer 2 To 1 (720 To 240 V)	1	-	-	-
27	450-42150	Isolation Transformer 2 To 1 (480 To 240 V)	1	-	-	-

Item	Part No.	Description	Qty.	Recommended Service Part	RSL Class	RSL Type
27	A040L270	Isolation Transformer 2 To 1 (480 To 240 V) (UL Cert)	1	-	-	-
27	A040N063	Isolation Transformer 2 To 1 (600 To 240 V) (UL Cert)	1	-	-	-
27	A049N972	Isolation Transformer 2 To 1 (720 To 240 V) (UL Cert)	1	-	-	-
28	45-0715	2 Bearing Adaptor Kit SAE 00 (C-F)	1	-	-	-
28	45-0716	2 Bearing Adaptor Kit SAE 0 (C-F)	1	-	-	-
28	45-1038	2 Bearing Adaptor Kit SAE 00 (G-H)	1	-	-	-
28	A046C895	2 Bearing Adaptor Kit SAE 0 (J-K)	1	-	-	-
28	A051Y983	2 Bearing Adaptor Kit SAE 0 (G-H)	1	-	-	-
28	A054Y386	2 Bearing Adaptor Kit SAE 00 (J-K)	1	-	-	-
Not Shown	45-0281	Kluber Grease 400g	1	Yes	B	M

 Copyright © 2025 Cummins Inc.

This page is intentionally blank.

36 S7 HV One Bearing Alternator

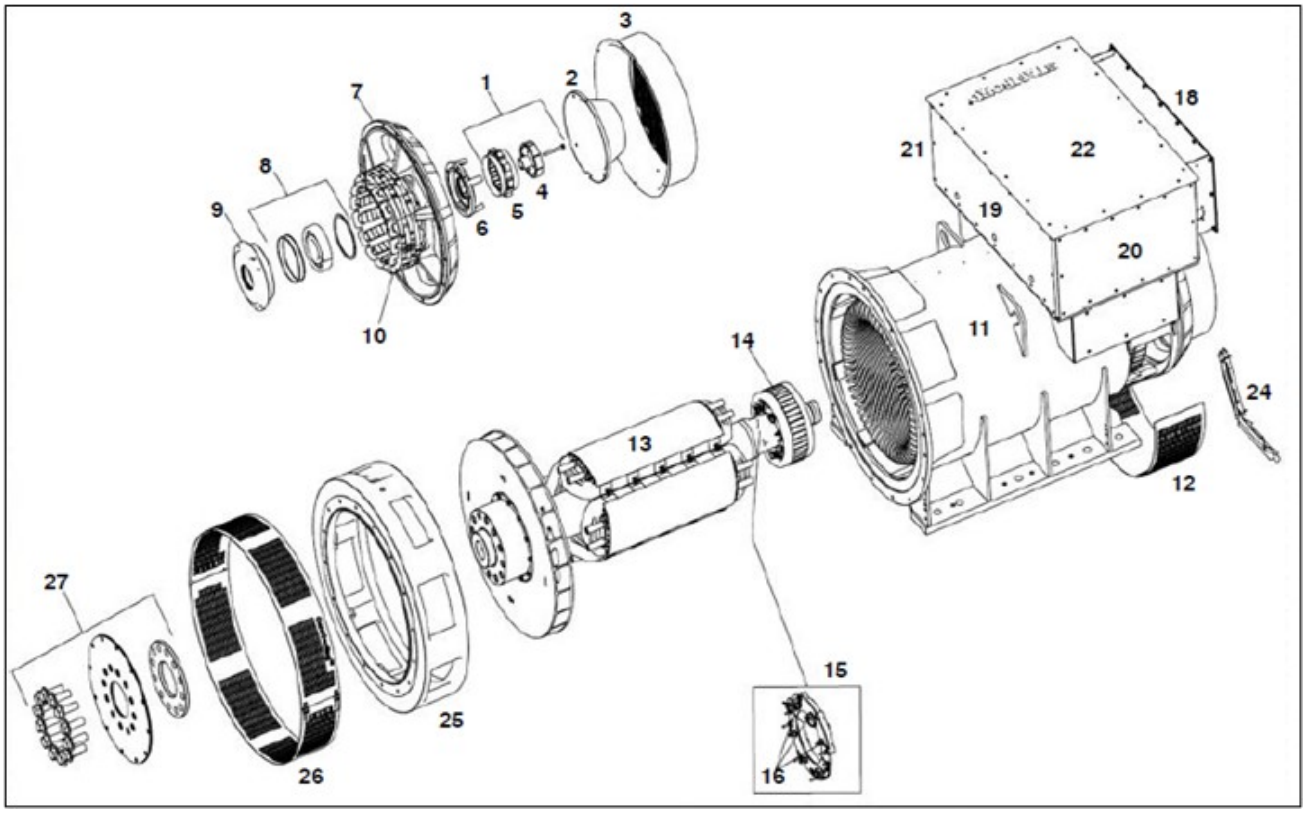

FIGURE 35. S7 HV ONE BEARING ALTERNATOR PARTS DRAWING

TABLE 36. S7 HV ONE BEARING ALTERNATOR PARTS LIST

Item	Part No.	Description	Qty.	Recommended Service Part	RSL Class	RSL Type
1	45-0119A	Complete PMG Upfit Kit	1	-	-	-
2	760-10562	PMG Cover (Cover Included In Above Kit)	1	-	-	-
3	A051X538	NDE Air Inlet Cover	1	-	-	-
4	45-1082	PMG Rotor/Stator Repair Kit	1	Yes	A	SC
5	45-1082	PMG Rotor/Stator Repair Kit	1	Yes	A	SC
6	760-10823	NDE Bearing Cap	1	-	-	-
7	A063E233	NDE Bracket	1	-	-	-
8	45-0337	NDE Regrease Bearing Kit	1	Yes	B	M
8	45-0418	NDE Sealed Bearing Kit	1	Yes	B	M
9	760-10821	NDE Bearing Cartridge	1	-	-	-
10	A057B918	Exciter Stator 75 mm	1	Yes	A	SC
11	QMSN	Main Stator Frame Assembly	1	-	-	-
12	760-11274	NDE Bottom Cover	1	-	-	-
13	QMSN	Main Rotor Assembly	1	-	-	-

 Copyright © 2025 Cummins Inc.

Item	Part No.	Description	Qty.	Recommended Service Part	RSL Class	RSL Type
14	A063D254	Exciter Rotor	1	Yes	A	SC
15	760-11216	Rotating Rectifier Assembly	1	Yes	A	SC
16	RSK-6001	Diode Forward/Reverse And Varistor Kit	1	Yes	A	SC
17	A063C067	Terminal Box Bracket (Not Shown)	1	-	-	-
18	A063C059	Terminal Box End Panel NDE	1	-	-	-
19	A063C065	Terminal Box End Panel DE	1	-	-	-
20	A063C064	Terminal Box Side Panel	1	-	-	-
21	A063C069	Terminal Box Side Panel (Cable Entry Side)	1	-	-	-
22	A063C066	Terminal Box Lid	1	-	-	-
23	A054S072	AVR DECS-100	1	Yes	A	SC
24	A064T022	Heater Kit 110-125 V	1	-	-	-
24	A064T028	Heater Kit 220-260 V	1	-	-	-
25	A062G795	DE Adaptor Kit (SAE 0)	1	-	-	-
25	A062G809	DE Adaptor Kit (SAE 00)	1	-	-	-
26	SEE NO. 25	DE Screen (Included In Adaptor Kits)	1	-	-	-
27	45-0792	Coupling Kit SAE 18 (Standard)	1	-	-	-
27	45-0793	Coupling Kit SAE 21	1	-	-	-

Copyright © 2025 Cummins Inc.

37 S7 HV Two Bearing Alternator

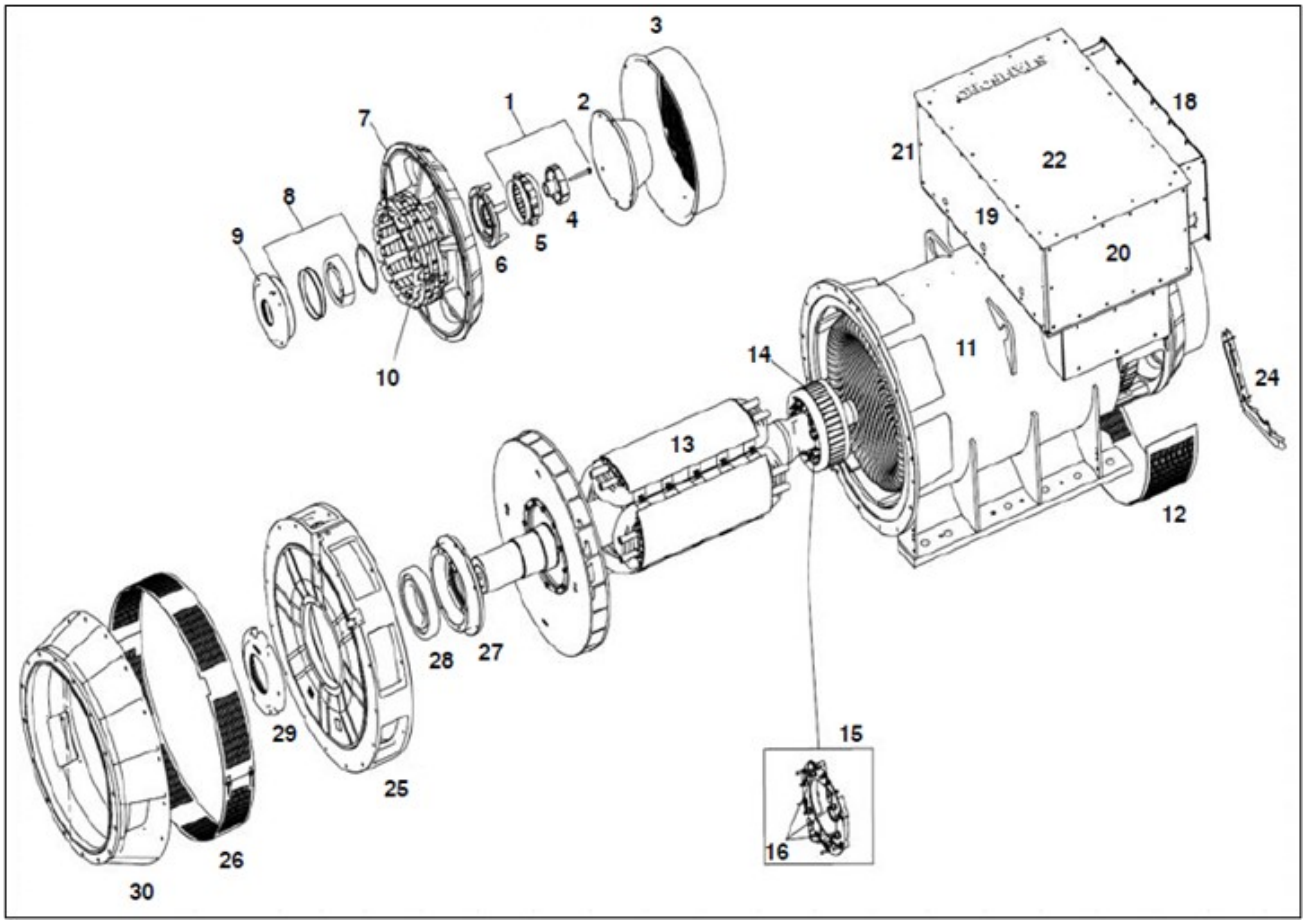

FIGURE 36. S7 HV TWO BEARING ALTERNATOR PARTS DRAWING

TABLE 37. S7 HV TWO BEARING ALTERNATOR PARTS LIST

Item	Part No.	Description	Qty.	Recommended Service Part	RSL Class	RSL Type
1	45-0119A	Complete PMG Upfit Kit	1	-	-	-
2	760-10562	PMG Cover (Cover Included In Above Kit)	1	-	-	-
3	A051X538	NDE Air Inlet Cover	1	-	-	-
4	45-1082	PMG Rotor/Stator Repair Kit	1	Yes	A	SC
5	45-1082	PMG Rotor/Stator Repair Kit	1	Yes	A	SC
6	760-10823	NDE Bearing Cap	1	-	-	-
7	A063E233	NDE Bracket	1	-	-	-
8	45-0336	NDE Regrease Bearing Kit	1	Yes	B	M
9	760-10821	NDE Bearing Cartridge	1	-	-	-
10	A057B918	Exciter Stator 75 mm	1	Yes	A	SC
11	QMSN	Main Stator Frame Assembly	1	-	-	-

 Copyright © 2025 Cummins Inc.

Item	Part No.	Description	Qty.	Recommended Service Part	RSL Class	RSL Type
12	760-11274	NDE Bottom Cover	1	-	-	-
13	QMSN	Main Rotor Assembly	1	-	-	-
14	A063D254	Exciter Rotor	1	Yes	A	SC
15	760-11216	Rotating Rectifier Assembly	1	Yes	A	SC
16	RSK-6001	Diode Forward/Reverse And Varistor Kit	1	Yes	A	SC
17	A063C067	Terminal Box Bracket (Not Shown)	1	-	-	-
18	A063C059	Terminal Box End Panel NDE	1	-	-	-
19	A063C065	Terminal Box End Panel DE	1	-	-	-
20	A063C064	Terminal Box Side Panel	1	-	-	-
21	A063C069	Terminal Box Side Panel (Cable Entry Side)	1	-	-	-
22	A063C066	Terminal Box Lid	1	-	-	-
23	A054S072	AVR DECS-100	1	Yes	A	SC
24	A064T022	Heater Kit 110-125 V	1	-	-	-
24	A064T028	Heater Kit 220-260 V	1	-	-	-
25	A050V498	DE Bracket	1	-	-	-
26	A051A780	DE Bracket Screen Bottom	1	-	-	-
26	A060W457	DE Bracket Screen Top	1	-	-	-
27	760-10923	DE Bearing Cartridge	1	-	-	-
28	45-0425	DE Regrease Bearing Kit	1	Yes	B	M
28	45-1078	NDE And DE Regrease Bearing Kit Complete	1	Yes	B	M
29	760-10924	DE Bearing Cap	1	-	-	-
30	A046C895	2 Bearing Adaptor Kit SAE 0	1	-	-	-
30	A062B516	2 Bearing Adaptor Kit SAE 00	1	-	-	-

38 A7 LV One Bearing Alternator

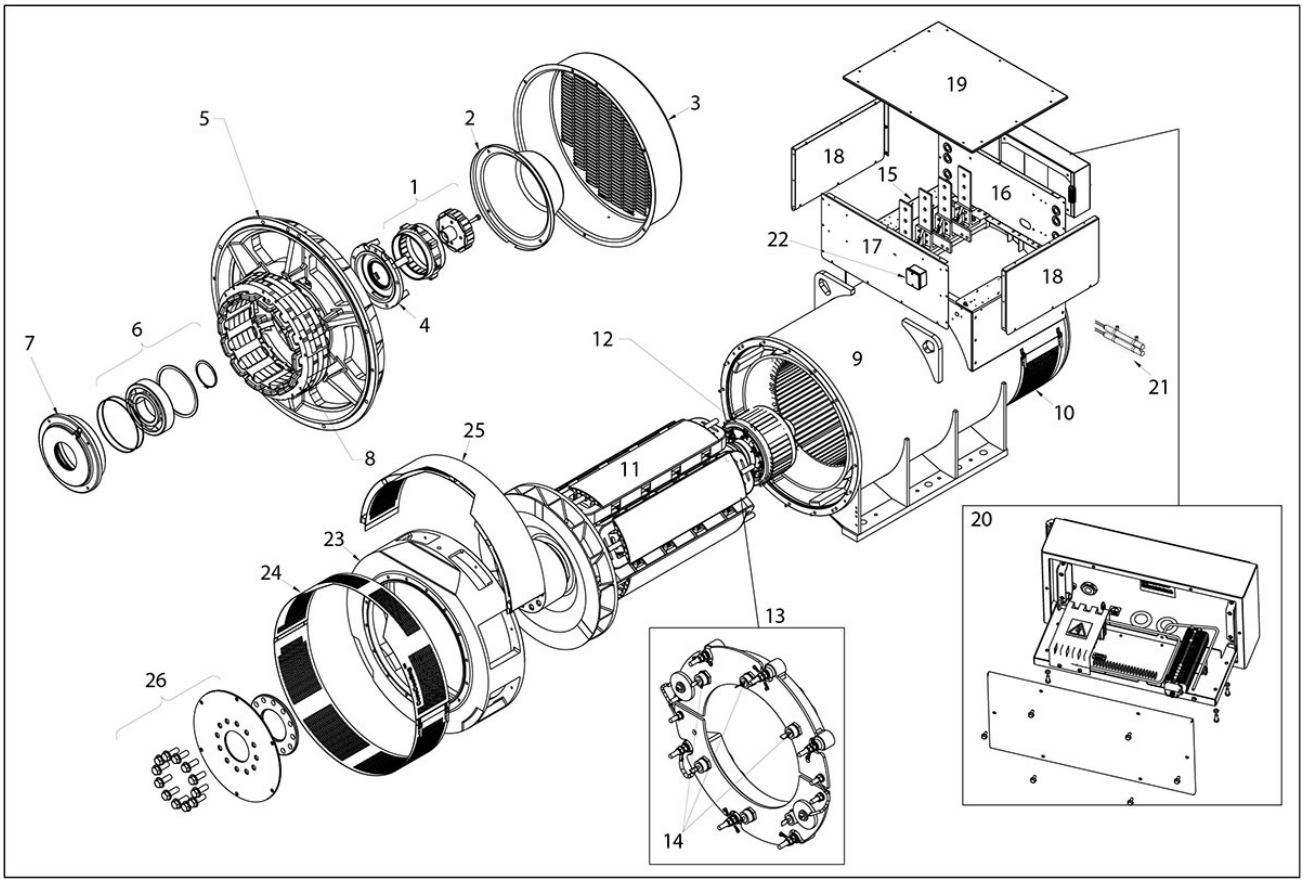

FIGURE 37. A7 LV ONE BEARING ALTERNATOR PARTS DRAWING

TABLE 38. A7 LV ONE BEARING ALTERNATOR PARTS LIST

Item	Part No.	Description	Qty.	Recommended Service Part	RSL Class	RSL Type
1	A075R686	PMG Rotor/Stator Repair Kit	1	Yes	A	SC
2	760-10562	PMG Cover	1	-	-	-
3	760-10965	NDE Air Inlet Cover (J-K) Marine	1	-	-	-
3	760-11005	NDE Air Inlet Cover (J-K) (Circular)	1	-	-	-
3	760-11279	NDE Air Inlet Cover (J-K)	1	-	-	-
3	A067S592	NDE Air Inlet Mesh Cover (K)	1	-	-	-
3	A067U584	NDE Air Inlet Louvre Cover (K)	1	-	-	-
4	760-10823	NDE Bearing Cap (C-J)	1	-	-	-
4	760-11026	NDE Bearing Cap For Use With Hardened Cartridge	1	-	-	-
4	A067S063	NDE Bearing Cap (K)	1	-	-	-

 Copyright © 2025 Cummins Inc.

Item	Part No.	Description	Qty.	Recommended Service Part	RSL Class	RSL Type
5	760-11205	NDE Bracket (J)	1	-	-	-
5	A065H305	NDE Bracket (K)	1	-	-	-
6	45-0336	NDE Regrease Bearing Kit (C-J)	1	Yes	B	M
6	45-0418	NDE Sealed Bearing Kit	1	Yes	B	M
6	45-0407	NDE Regrease Bearing Kit (K)	1	-	-	-
6	45-1153	NDE Regrease Bearing Kit With Caps And Cartridges (C-J)	1	-	-	-
6	A054Y391	NDE Sealed Bearing Kit With Caps And Cartridges	1	-	-	-
6	A074U518	NDE Regrease Bearing Kit With Caps And Cartridges (K)	1	-	-	-
7	760-10821	NDE Bearing Cartridge (C-J)	1	-	-	-
7	760-11016	NDE Bearing Cartridge (Hardened)	1	-	-	-
7	A067S066	NDE Bearing Cartridge (K)	1	-	-	-
8	366-15300	Exciter Stator 100 mm (H-J)	1	Yes	A	SC
8	A063V195	Exciter Stator 125 mm (K)	1	Yes	A	SC
9	QMSN	Main Stator Frame Assembly	1	-	-	-
10	366-21200	NDE Bottom Cover (Marine - Louvered)	1	-	-	-
10	366-21300	NDE Bottom Cover (Air Filter)	1	-	-	-
10	760-11274	NDE Bottom Cover	1	-	-	-
11	QMSN	Main Rotor Assembly	1	-	-	-
12	A063U496	Exciter Rotor 125mm (H-K)	1	Yes	A	SC
12	760-1291	Exciter Rotor 100mm (D)	1	Yes	A	SC
12	A065U425	Exciter Rotor 125mm (K)	1	Yes	A	SC
13	760-11216	Rotating Rectifier Assembly	1	Yes	A	SC
14	RSK-6001	Diode Forward/Reverse And Varistor Kit	1	Yes	A	SC
15	QMSN	Main Terminal Board	1	-	-	-
16	760-11185	Terminal Box End Panel NDE-Standard	1	-	-	-
16	760-11268	Terminal Box End Panel NDE-High Box	1	-	-	-
16	760-11594	Terminal Box End Panel NDE-Standard With Air Filter	1	-	-	-

Item	Part No.	Description	Qty.	Recommended Service Part	RSL Class	RSL Type
16	760-11594	Terminal Box End Panel NDE - Standard With Air Filter Marine	1	-	-	-
16	A041B941	Terminal Box End Panel NDE High With Air Filter	1	-	-	-
16	A041B941	Terminal Box End Panel NDE High With Air Filter Marine	1	-	-	-
16	A062Z045	Terminal Box End Panel NDE - High Box 500 mm	1	-	-	-
17	760-11185	Terminal Box End Panel DE - Standard	1	-	-	-
17	760-11185	Terminal Box End Panel DE - Standard With Air Filter	1	-	-	-
17	760-11185	Terminal Box End Panel DE - Standard With Air Filter Marine	1	-	-	-
17	760-11268	Terminal Box End Panel DE - High Box	1	-	-	-
17	760-11268	Terminal Box End Panel DE - High With Air Filter Marine	1	-	-	-
17	760-11268	Terminal Box End Panel DE - High With Air Filter	1	-	-	-
17	A062Z045	Terminal Box End Panel DE - Extra-High Box 500 mm	1	-	-	-
18	760-11186	Terminal Box Side Panel - Standard	2	-	-	-
18	760-11186	Terminal Box Side Panel - Standard With Air Filter	2	-	-	-
18	760-11186	Terminal Box Side Panel - Standard With Air Filter Marine	2	-	-	-
18	760-11269	Terminal Box Side Panel- High Box	2	-	-	-
18	760-11269	Terminal Box Side Panel - High With Air Filter	2	-	-	-
18	760-11269	Terminal Box Side Panel - High With Air Filter Marine	2	-	-	-
18	A062Z046	Terminal Box Side Panel - Extra High Box 500 mm	2	-	-	-
19	760-10663	Terminal Box Lid Standard/High/Air Filter And Marine	1	-	-	-
20	A060B914	AVR DECS-150	1	Yes	A	SC
20	E000-23800	AVR DM110	1	Yes	A	SC

 Copyright © 2025 Cummins Inc.

Item	Part No.	Description	Qty.	Recommended Service Part	RSL Class	RSL Type
21	A053M969	Heater 110-125 V UL Cert	1	-	-	-
21	A053M999	Heater Kit 110-125 V (Four Heater Cartridges) UL Cert	1	-	-	-
21	A053N003	Heater Kit 220-260 V UL Cert	1	-	-	-
21	A053N109	Heater Kit 220-260 V (Four Heater Cartridges) UL Cert	1	-	-	-
21	A053X258	Heater Kit 110-125 V To Include Term Box For Retro UL Cert	1	-	-	-
21	A053X260	Heater Kit 220-260 V To Include Term Box For Retro UL Cert	1	-	-	-
21	A053X401	Heater Kit 220-260 V (Four Heater Cartridges) To Inc Term Box For Retro UL	1	-	-	-
21	A053X422	Heater Kit 110-125 V (Four Heater Cartridges) To Inc Item Box For Retro UL	1	-	-	-
22	45-0024	Terminal Box For Heaters	1	-	-	-
23	A062G747	DE Adaptor Kit (SAE 0) (C)	1	-	-	-
23	A062G770	DE Adaptor Kit (SAE 0) (D-H)	1	-	-	-
23	A062G782	DE Adaptor Kit (SAE 00) (C-H)	1	-	-	-
23	A062G795	DE Adaptor Kit (SAE 0) (J)	1	-	-	-
23	A062G809	DE Adaptor kit (SAE 00) (J)	1	-	-	-
24	See No.23	DE Screen (Included In Adaptor Kits)	1	-	-	-
25	45-1049	Louvre Kit SAE 00 (C-H)	1	-	-	-
25	45-1050	Louvre Kit SAE 00 (J)	1	-	-	-
25	45-1051	Louvre Kit SAE 0 (C-H)	1	-	-	-
25	45-1052	Louvre Kit SAE 0 (J)	1	-	-	-
26	45-0792	Coupling Kit SAE 18 (Standard)	1	-	-	-
26	45-0793	Coupling Kit SAE 21	1	-	-	-
26	45-0794	Coupling Kit SAE 24	1	-	-	-
26	45-1005	Coupling Kit SAE 18 (Special 12 Hole)	1	-	-	-
26	A061X995	Coupling Kit SAE 18 (J)	1	-	-	-
26	A061X997	Coupling Kit SAE 21 (J)	1	-	-	-
Not Shown	45-0281	Kluber Grease 400g	1	Yes	B	M

39 A7 LV Two Bearing Alternator

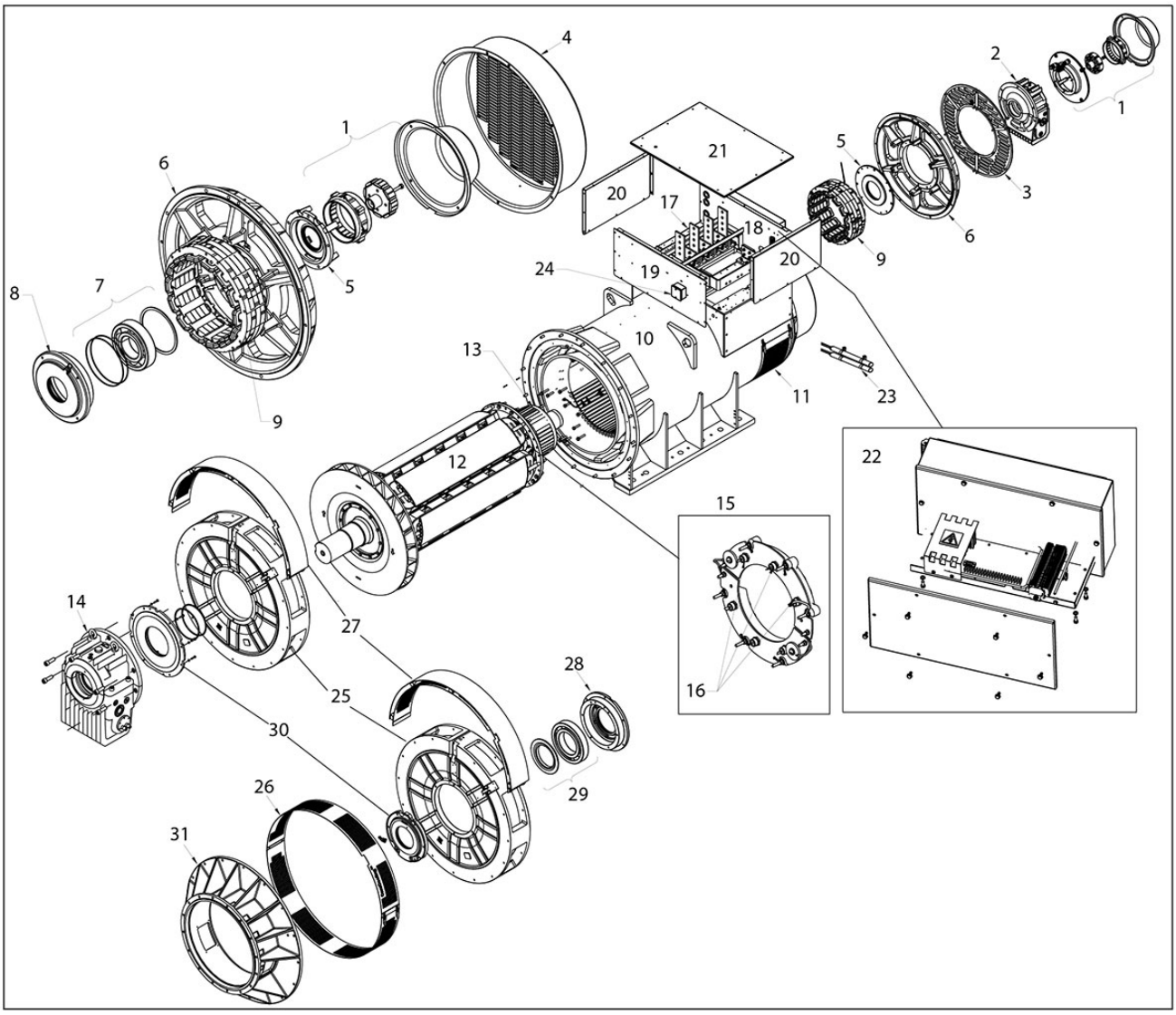

FIGURE 38. A7 LV TWO BEARING ALTERNATOR PARTS DRAWING

TABLE 39. A7 LV TWO BEARING ALTERNATOR PARTS LIST

Item	Part No.	Description	Qty.	Recommended Service Part	RSL Class	RSL Type
1	A075R686	PMG Rotor/Stator Repair Kit	1	Yes	A	SC
1	760-10562	PMG Cover	1	-	-	-
2	A075L862	NDE Sleeve Bearing	1	-	-	-
2	A078K568	NDE Bearing Shell Kit	1	Yes	B	M
2	A067T927	NDE Sleeve Bearing Labyrinth Seal	1	Yes	B	M
2	A067T942	NDE Sleeve Bearing Oil Ring	1	Yes	B	M
2	A067T912	NDE Sleeve Bearing Drain Plug	1	Yes	C	M

 Copyright © 2025 Cummins Inc.

Item	Part No.	Description	Qty.	Recommended Service Part	RSL Class	RSL Type
2	A072J784	NDE Sleeve Bearing Oil Sight Glass G1	1	Yes	C	M
2	A072J788	NDE Sleeve Bearing Top Oil Sight Glass G1 1/4	1	Yes	C	M
2	A075M124	NDE Sleeve Bearing Drain Plug BSP 1 1/4	1	Yes	C	M
2	A075M125	NDE Sleeve Bearing Drain Plug BSP 3/8	1	Yes	C	M
2	A075M120	NDE Sleeve Bearing Grease Deflector	1	Yes	C	M
2	A075M130	NDE Sleeve Bearing Carrier	1	Yes	C	M
3	A077T884	NDE Cover - Louver (Top Right From DE)	1	-	-	-
3	A077T885	NDE Cover - Louver (Bottom Right From DE)	1	-	-	-
3	A077T886	NDE Cover - Louver (Top Left From DE)	1	-	-	-
3	A077T887	NDE Cover - Louver (Bottom Left From DE)	1	-	-	-
3	A078N313	NDE Cover (Top) - Sealed	2	-	-	-
3	A078N314	NDE Cover (Bottom) - Sealed	2	-	-	-
4	760-10965	NDE Air Inlet Cover (J) Marine	1	-	-	-
4	760-11005	NDE Air Inlet Cover (J) (Circular)	1	-	-	-
4	760-11279	NDE Air Inlet Cover (J)	1	-	-	-
4	A067U584	NDE Air Inlet Louvre Cover (K)	1	-	-	-
5	760-10823	NDE Bearing Cap (C-J)	1	-	-	-
5	760-11026	NDE Bearing Cap For Use With Hardened Cartridge	1	-	-	-
5	A065K478	NDE Sleeve Bearing Cap (D, H, J, K)	1	-	-	-
5	A067S063	NDE Bearing Cap (K)	1	-	-	-
6	760-10819	NDE Bracket (C-H)	1	-	-	-
6	A078A229	Sleeve Bearing NDE Bracket	1	-	-	-
6	760-11205	NDE Bracket (J)	1	-	-	-
6	A065H305	NDE Bracket (K)	1	-	-	-
7	45-0336	NDE Regrease Bearing Kit (C-J)	1	Yes	B	M
7	45-0419	NDE Sealed Bearing Kit	1	Yes	B	M

Copyright © 2025 Cummins Inc.

Item	Part No.	Description	Qty.	Recommended Service Part	RSL Class	RSL Type
7	A076K457	NDE Insulated Bearing Kit (D, H, J)	1	Yes	B	M
7	A076K459	NDE Insulated Bearing Kit (K)	1	Yes	B	M
7	45-0407	NDE Regrease Bearing Kit (K)	1	Yes	B	M
7	45-1153	NDE Regrease Bearing Kit With Caps And Cartridges (C-J)	1	Yes	B	M
7	A074U518	NDE Regrease Bearing Kit With Caps And Cartridges (K)	1	Yes	B	M
8	760-10821	NDE Bearing Cartridge (C-J)	1	-	-	-
8	760-11016	NDE Bearing Cartridge (Hardened)	1	-	-	-
8	A067S066	NDE Bearing Cartridge (K)	1	-	-	-
9	366-15300	Exciter Stator 100mm (D)	1	Yes	A	SC
9	A063V195	Exciter Stator 125mm (H,J,K)	1	Yes	A	SC
10	QMSN	Main Stator Frame Assembly	1	-	-	-
11	366-21200	NDE Bottom Cover (Marine - Louvered)	1	-	-	-
11	366-21300	NDE Bottom Cover (Air Filter)	1	-	-	-
11	760-11274	NDE Bottom Cover	1	-	-	-
12	QMSN	Main Rotor Assy	1	-	-	-
13	A063U496	Exciter Rotor 125mm (H,J,K)	1	Yes	A	SC
13	760-1291	Exciter Rotor 100mm (D)	1	Yes	A	SC
14	A075L861	DE Sleeve Bearing	1	-	-	-
14	A075M133	Bearing Housing	1	Yes	B	M
14	A067T867	Labyrinth Seal	1	Yes	B	M
14	A067T907	Oil Ring	1	Yes	B	M
14	A067T912	Drain Plug	1	Yes	C	M
14	A075M123	DE Sleeve Bearing Drain Plug BSP 1 1/2	1	Yes	C	M
14	A075M125	DE Sleeve Bearing Drain Plug BSP 3/8	1	Yes	C	M
14	A072J786	Oil Sight Glass G1 1/2-Sk 33 L	1	Yes	C	M
14	A075M128	Top Oil Sight Glass G1 1/2	1	Yes	C	M
14	A075M121	DE Sleeve Bearing Grease Deflector	1	Yes	C	M

 Copyright © 2025 Cummins Inc.

Item	Part No.	Description	Qty.	Recommended Service Part	RSL Class	RSL Type
14	A075M131	DE Sleeve Bearing Carrier	1	Yes	C	M
14	A078K565	DE Bearing Shell Kit	1	Yes	B	M
15	760-11216	Rotating Rectifier Assembly	1	Yes	A	SC
16	RSK-6001	Diode Forward/Reverse And Varistor Kit	1	Yes	A	SC
17	QMSN	Main Terminal Board	1	-	-	-
18	760-11185	Terminal Box End Panel DE-Standard	1	-	-	-
18	760-11268	Terminal Box End Panel NDE-High Box	1	-	-	-
18	760-11594	Terminal Box End Panel NDE-Standard With Air Filter	1	-	-	-
18	760-11594	Terminal Box End Panel NDE-Standard With Air Filter Marine	1	-	-	-
18	A041B941	Terminal Box End Panel NDE High With Air Filter	1	-	-	-
18	A041B941	Terminal Box End Panel NDE High With Air Filter Marine	1	-	-	-
18	A062Z045	Terminal Box End Panel NDE-Extra-High Box 500 mm	1	-	-	-
19	760-11185	Terminal Box End Panel DE-Standard	1	-	-	-
19	760-11185	Terminal Box End Panel DE-Standard With Air Filter Marine	1	-	-	-
19	760-11185	Terminal Box End Panel DE-Standard With Air Filter Marine	1	-	-	-
19	760-11268	Terminal Box End Panel DE-High Box	1	-	-	-
19	760-11268	Terminal Box End Panel DE-High With Air Filter Marine	1	-	-	-
19	760-11268	Terminal Box End Panel DE-High With Air Filter	1	-	-	-
19	A062Z045	Terminal Box End Panel DE-Extra-High Box 500 mm	1	-	-	-
20	760-11186	Terminal Box Side Panel-Standard	2	-	-	-
20	760-11186	Terminal Box Side Panel-Standard With Air Filter	2	-	-	-
20	760-11186	Terminal Box Side Panel-Standard With Air Filter Marine	2	-	-	-

Item	Part No.	Description	Qty.	Recommended Service Part	RSL Class	RSL Type
20	760-11269	Terminal Box Side Panel-High Box	2	-	-	-
20	760-11269	Terminal Box Side Panel-High With Air Filter	2	-	-	-
20	760-11269	Terminal Box Side Panel-High With Air Filter Marine	2	-	-	-
20	A062Z046	Terminal Box Side Panel-Extra High Box 500 mm	2	-	-	-
21	760-10663	Terminal Box Lid Standard/High/Air Filter And Marine	1	-	-	-
22	A060B914	AVR DECS-150	1	Yes	A	SC
22	E000-23800	AVR DM110	1	Yes	A	SC
23	A053M969	Heater Kit 110-125 V UL Cert	1	-	-	-
23	A053M999	Heater Kit 110-125 V (Four Heater Cartridges) UL Cert	1	-	-	-
23	A053N003	Heater Kit 220-260 V UL Cert	1	-	-	-
23	A053N109	Heater Kit 220-260 V (Four Heater Cartridges) UL Cert	1	-	-	-
23	A053X258	Heater Kit 110-125 V To Include Term Box For Retro UL Cert	1	-	-	-
23	A053X260	Heater Kit 220-260 V To Include Term Box For Retro UL Cert	1	-	-	-
23	A053X401	Heater Kit 220-260 V (Four Heater Cartridges) To Inc Term Box For Retro UL	1	-	-	-
23	A053X422	Heater Kit 110-125 V (Four Heater Cartridges) To Inc Item Box For Retro UL	1	-	-	-
24	45-0024	Terminal Box For Heaters	1	-	-	-
25	760-10912	DE Bracket (G-H)	1	-	-	-
25	760-11160	DE Bracket (C-F)	1	-	-	-
25	A050V498	DE Bracket (J-K)	1	-	-	-
25	A065G884	Sleeve Bearing Drive End Bracket (J-K)	1	-	-	-
25	A065L159	Sleeve Bearing Drive End Bracket (D,H)	1	-	-	-
26	760-10930	DE Bracket Screen Bottom (C-H)	1	-	-	-
26	A051A780	DE Bracket Screen Bottom (J-K)	1	-	-	-

 Copyright © 2025 Cummins Inc.

Item	Part No.	Description	Qty.	Recommended Service Part	RSL Class	RSL Type
26	A060W457	DE Bracket Screen Top (Industrial) (J-K)	1	-	-	-
26	A060W997	DE Bracket Screen Top (Industrial) (C-H)	1	-	-	-
27	45-1053	Louvre Kit (C-H)	1	-	-	-
27	45-1054	Louvre Kit (J)	1	-	-	-
28	760-10829	DE Bearing Cartridge (C-F)	1	-	-	-
28	760-10923	DE Bearing Cartridge (G-K)	1	-	-	-
29	45-0335	DE Regrease Bearing Kit (C-F)	1	Yes	B	M
29	45-0425	DE Regrease Bearing Kit (G-K)	1	Yes	B	M
29	45-1077	NDE And DE Regrease Bearing. Kit Complete (C-F)	1	-	-	-
29	45-1078	NDE And DE Regrease Bearing Kit Complete (G-J)	1	-	-	-
29	45-1154	D.E Regrease Bearing Kit With Caps And Cartridges (C- F)	1	-	-	-
29	45-1155	DE Regrease Bearing Kit With Caps And Cartridges (G-K)	1	-	-	-
29	A074U997	NDE And DE Regrease Bearing Kit Complete (K)	1	-	-	-
30	760-10831	DE Bearing Cap (C-F)	1	-	-	-
30	760-10924	DE Bearing Cap (G-K)	1	-	-	-
30	A065K301	Sleeve Bearing DE Cap (D, H, J,K)	1	-	-	-
30	A075R122	DE Bearing Cap for earthing brush - Insulated Bearings (C-F)	1	TBA	TBA	TBA
30	A075R123	DE Bearing Cap for earthing brush - Insulated Bearings (H,J,K)	1	TBA	TBA	TBA
30	A075S219	Earthing brush Sleeve & Insulated Bearings	1	Yes	A	SC
31	45-0715	2 Bearing Adaptor Kit SAE 00 (C-F)	1	-	-	-
31	45-0716	2 Bearing Adaptor Kit SAE 0 (C-F)	1	-	-	-
31	45-1038	2 Bearing Adaptor Kit SAE 00 (G-H)	1	-	-	-

Item	Part No.	Description	Qty.	Recommended Service Part	RSL Class	RSL Type
31	A046C895	2 Bearing Adaptor Kit SAE 0 (J-K)	1	-	-	-
31	A051Y983	2 Bearing Adaptor Kit SAE 0 (G-H)	1	-	-	-
31	A054Y386	2 Bearing Adaptor Kit SAE 00 (J-K)	1	-	-	-
Not Shown	45-0281	Kluber Grease 400g	1	Yes	B	M

 Copyright © 2025 Cummins Inc.

This page is intentionally blank.

40 A7 WLV Two Bearing Alternator

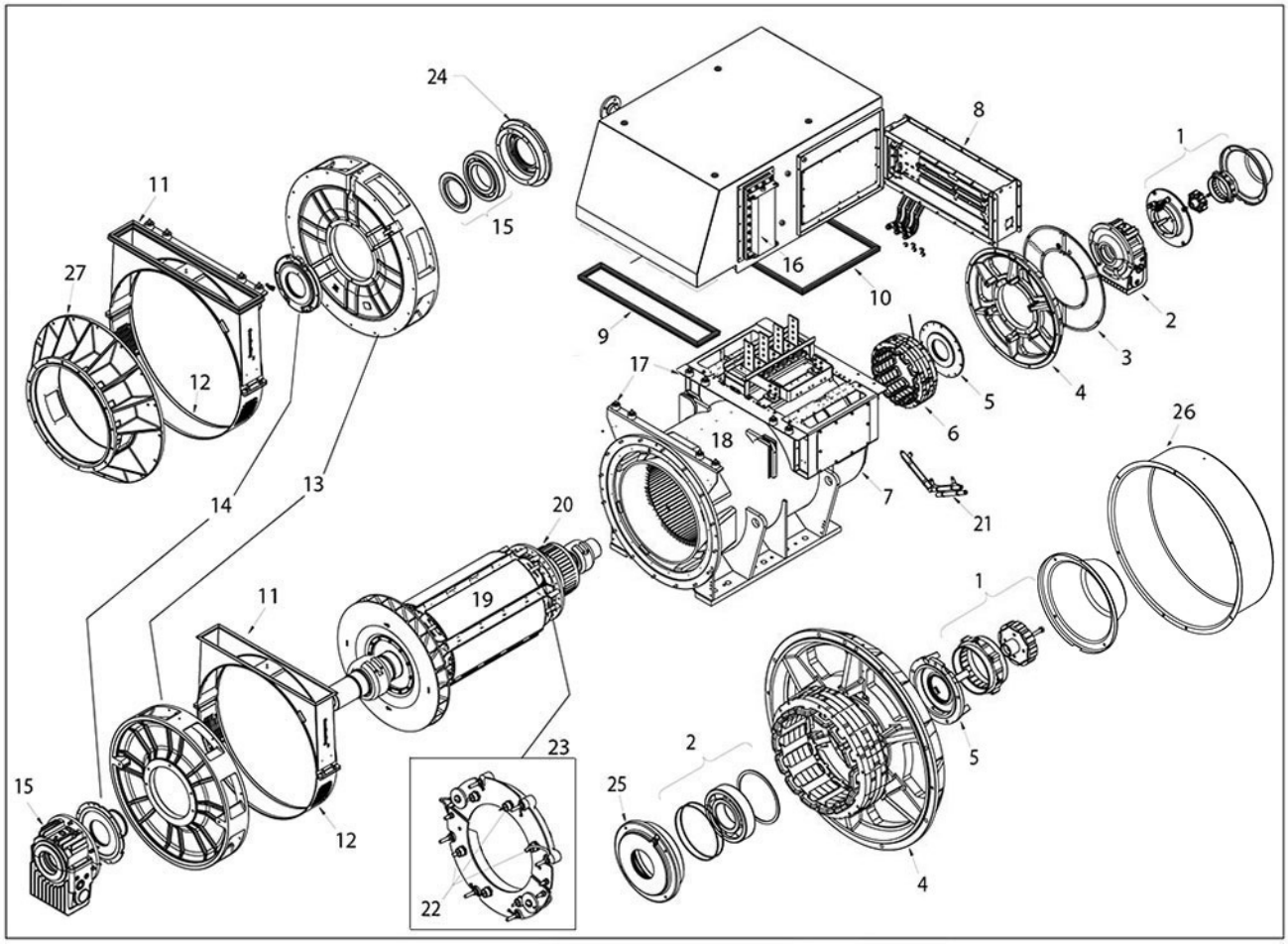

FIGURE 39. A7 WLV TWO BEARING ALTERNATOR PARTS DRAWING

TABLE 40. A7 WLV TWO BEARING ALTERNATOR PARTS LIST

Item	Part No.	Description	Qty.	Recommended Service Part	RSL Class	RSL Type
1	A075R686	PMG Rotor/Stator Repair Kit	1	Yes	A	SC
1	760-10562	PMG Cover	1	-	-	-
1	A065W008	PMG Stator Mount (Non-Drive End Sleeve Bearing Face)	1	-	-	-
1	A067R585	Complete PMG Repair Kit-Sleeve Bearing Frame	1	Yes	A	SC
2	A075L862	NDE Sleeve Bearing	1	-	-	-
2	A078K568	NDE Bearing Shell Kit	1	Yes	B	M
2	A067T927	NDE Sleeve Bearing Labyrinth Seal	1	Yes	B	M
2	A067T942	NDE Sleeve Bearing Oil Ring	1	Yes	B	M

 Copyright © 2025 Cummins Inc.

Item	Part No.	Description	Qty.	Recommended Service Part	RSL Class	RSL Type
2	A067T912	NDE Sleeve Bearing Drain Plug	1	Yes	C	M
2	A072J784	NDE Sleeve Bearing Oil Sight Glass G1	1	Yes	C	M
2	A072J788	NDE Sleeve Bearing Top Oil Sight Glass G1 1/4	1	Yes	C	M
2	A075M124	NDE Sleeve Bearing Drain Plug BSP 1 1/4	1	Yes	C	M
2	A075M125	NDE Sleeve Bearing Drain Plug BSP 3/8	1	Yes	C	M
2	A075M120	NDE Sleeve Bearing Grease Deflector	1	Yes	C	M
2	A075M130	NDE Sleeve Bearing Carrier	1	Yes	C	M
2	45-0336	NDE Regrease Bearing Kit (C-J)	1	Yes	B	M
2	45-0407	NDE Regrease Bearing Kit (K)	1	Yes	B	M
2	45-1153	NDE Regrease Bearing Kit With Caps And Cartridges (C-J)	1	-	-	-
2	A074U518	NDE Regrease Bearing Kit With Caps And Cartridges (K)	1	-	-	-
2	A076K457	NDE Insulated Bearing Kit (D, H, J)	1	Yes	B	M
2	A076K459	NDE Insulated Bearing Kit (K)	1	Yes	B	M
3	A065L739	End Cover (D, H, J, K)	2	-	-	-
3	A078N313	NDE Cover (Top) - Sealed For Water Cooling	2	-	-	-
3	A078N314	NDE Cover (Bottom) - Sealed For Water Cooling	2	-	-	-
4	760-10819	NDE Bracket (C-H)	1	-	-	-
4	A078A229	Sleeve Bearing NDE Bracket	1	-	-	-
4	760-11205	NDE Bracket (J)	1	-	-	-
4	A065H305	NDE Bracket (K)	1	-	-	-
5	760-10823	NDE Rolling Element Bearing Cap	1	-	-	-
5	760-11026	NDE Rolling Element Bearing Cap With Hardened Cartridge	1	-	-	-
5	A065K478	NDE Sleeve Bearing Cap (D, H, J, K)	1	-	-	-

Item	Part No.	Description	Qty.	Recommended Service Part	RSL Class	RSL Type
6	A063V195	Exciter Stator 125 mm (H, J, K)	1	Yes	A	SC
6	366-15300	Exciter Stator 100 mm (D)	1	Yes	A	SC
7	366-21300	NDE Bottom Cover (Air Filter) (D, E, F, J)	1	-	-	-
8	A060B914	AVR DECS-150	1	Yes	A	SC
8	E000-23800	AVR DM110	1	Yes	A	SC
9	A073Z035	Heat Exchanger Gasket Seal - S7 6P D/H/J/K NDE	1	Yes	B	M
9	A073Z036	Heat Exchanger Gasket Seal - S7 6P J/K DE	1	Yes	B	M
10	A073Z037	Heat Exchanger Gasket Seal - S7 6P D/H DE	1	Yes	B	M
11	A065H096	DE Adaptor Top Cover Air Duct (J)	1	-	-	-
11	A065Y020	DE Adaptor Top Cover Air Duct (D, E, F)	1	-	-	-
12	A065H090	DE Adaptor Bottom Cover (D, E, F, J)	1	-	-	-
13	760-10912	Rolling Element Bearing DE Bracket (G-H)	1	-	-	-
13	760-11160	Rolling Element Bearing DE Bracket (C-F)	1	-	-	-
13	A050V498	Rolling Element Bearing DE Bracket (J-K)	1	-	-	-
13	A065G884	Sleeve Bearing Drive End Bracket (J-K)	1	-	-	-
13	A065L159	Sleeve Bearing Drive End Bracket (D, H)	1	-	-	-
14	760-10831	DE Bearing Cap (Rolling Element Bearing) (C-F)	1	-	-	-
14	760-10924	DE Bearing Cap-Rolling Element Bearing (G-J)	1	-	-	-
14	A065K301	DE Sleeve Bearing Cap (D, H, J, K)	1	-	-	-
14	A076F786	Sleeve Bearing Sealing Gasket	1	Yes	B	M
14	A075R122	DE Bearing Cap for earthing brush - Insulated Bearings (C-F)	1	TBA	TBA	TBA
14	A075R123	DE Bearing Cap for earthing brush - Insulated Bearings (H, J, K)	1	TBA	TBA	TBA

 Copyright © 2025 Cummins Inc.

Item	Part No.	Description	Qty.	Recommended Service Part	RSL Class	RSL Type
15	45-0335	DE Regrease Bearing Kit (C-F)	1	Yes	B	M
15	45-0425	DE Regrease Bearing Kit (G-K)	1	Yes	B	M
15	45-1077	NDE And DE Regrease Bearing. Kit Complete (C-F)	1	-	-	-
15	45-1078	NDE And DE Regrease Bearing Kit Complete (G-J)	1	-	-	-
15	A074U997	NDE And DE Regrease Bearing Kit Complete (K)	1	-	-	-
15	45-1154	DE Regrease Bearing Kit With Caps And Cartridges (C-F)	1	-	-	-
15	45-1155	DE Regrease Bearing Kit With Caps And Cartridges (G-K)	1	-	-	-
15	A075L861	DE Sleeve Bearing (C-F)	1	-	-	-
15	A075M133	DE Sleeve Bearing Housing	1	Yes	B	M
15	A067T867	DE Sleeve Bearing Labyrinth Seal	1	Yes	B	M
15	A067T907	DE Sleeve Bearing Oil Ring	1	Yes	B	M
15	A067T912	DE Sleeve Bearing Drain Plug	1	Yes	C	M
15	A075M123	DE Sleeve Bearing Drain Plug BSP 1 1/2	1	Yes	C	M
15	A075M125	DE Sleeve Bearing Drain Plug BSP 3/8	1	Yes	C	M
15	A072J786	DE Sleeve Bearing Oil Sight Glass G1 1/2-Sk 33 L	1	Yes	C	M
15	A075M128	DE Sleeve Bearing Top Oil Sight Glass G1 1/2	1	Yes	C	M
15	A075M121	DE Sleeve Bearing Grease Deflector	1	Yes	C	M
15	A075M131	DE Sleeve Bearing Carrier	1	Yes	C	M
15	A078K565	DE Bearing Shell Kit	1	Yes	B	M
16	A074Z149	Heat Exchanger Left Hand (H) Fresh Water	1	-	-	-
16	A074Z150	Heat Exchanger Right Hand (H) Fresh Water	1	-	-	-
16	A074Z151	Heat Exchanger Left Hand (H) Sea Water	1	-	-	-
16	A074Z152	Heat Exchanger Right Hand (H) Sea Water	1	-	-	-

Item	Part No.	Description	Qty.	Recommended Service Part	RSL Class	RSL Type
16	A073X159	Heat Exchanger Left Hand (D) Fresh Water	1	-	-	-
16	A073X161	Heat Exchanger Right Hand (D) Fresh Water	1	-	-	-
16	A074M229	Heat Exchanger Left Hand (D) Sea Water-AVR @ NDE	1	-	-	-
16	A074M230	Heat Exchanger Right Hand (D) Sea Water-AVR @ NDE	1	-	-	-
16	A073U144	Heat Exchanger Left Hand (J) Fresh Water	1	-	-	-
16	A073U146	Heat Exchanger Right Hand (J) Fresh Water	1	-	-	-
16	A074M695	Heat Exchanger Left Hand (J) Sea Water-AVR @ NDE	1	-	-	-
16	A074M696	Heat Exchanger Right Hand (J) Sea Water-AVR @ NDE	1	-	-	-
16	A073T318	Heat Exchanger Left Hand (K) Fresh Water	1	-	-	-
16	A073T319	Heat Exchanger Right Hand (K) Fresh Water	1	-	-	-
16	A074M699	Heat Exchanger Left Hand (K) Sea Water-AVR @ NDE	1	-	-	-
16	A074M700	Heat Exchanger Right Hand (K) Sea Water-AVR @ NDE	1	-	-	-
17	A065X995	Anti-Vibration Mount	8	Yes	B	M
18	QMSN	Main Stator Frame Assembly	1	-	-	-
19	QMSN	Main Rotor Assembly	1	-	-	-
20	A063U496	Exciter Rotor 125mm (H, J, K)	1	Yes	A	SC
20	760-1291	Exciter Rotor 100mm (D)	1	Yes	A	SC
21	45-0024	Terminal Box For Heaters	1	-	-	-
21	A053M969	Heater 110-125 V UL Cert	1	-	-	-
21	A053M999	Heater Kit 110-125 V (Four Heater Cartridges) UL Cert	1	-	-	-
21	A053N003	Heater 220-260 V UL Cert	1	-	-	-
21	A053N109	Heater Kit 220-260 V (Four Heater Cartridges) UL Cert	1	-	-	-
21	A053X258	Heater Kit 110-125 V To Include Term Box For Retro UL Cert	1	-	-	-
21	A053X260	Heater Kit 220-260 V To Include Term Box For Retro UL Cert	1	-	-	-

 Copyright © 2025 Cummins Inc.

Item	Part No.	Description	Qty.	Recommended Service Part	RSL Class	RSL Type
21	A053X401	Heater Kit 220-260 V (Four Heater Cartridges) To Inc Term Box For Retro UL	1	-	-	-
21	A053X422	Heater Kit 110-125 V (Four Heater Cartridges) To Inc Item Box For Retro UL	1	-	-	-
22	RSK-6001	Diode Forward/Reverse And Varistor Kit	1	Yes	A	SC
23	760-11216	Rotating Rectifier Assembly	1	Yes	A	SC
24	760-10829	DE Bearing Cartridge (C-F)	1	-	-	-
24	760-10923	DE Bearing Cartridge (G-J)	1	-	-	-
25	760-10821	NDE Bearing Cartridge	1	-	-	-
25	760-11016	NDE Bearing Cartridge (Hardened)	1	-	-	-
26	760-10965	NDE Air Inlet Cover (J) Marine	1	-	-	-
26	760-11005	NDE Air Inlet Cover (J) (Circular)	1	-	-	-
26	760-11279	NDE Air Inlet Cover (J)	1	-	-	-
27	45-0715	2 Bearing Adaptor Kit SAE 00 (C-F)	1	-	-	-
27	45-0716	2 Bearing Adaptor Kit SAE 0 (C-F)	1	-	-	-
27	45-1038	2 Bearing Adaptor Kit SAE 00 (G-H)	1	-	-	-
27	A046C895	2 Bearing Adaptor Kit SAE 0 (J-K)	1	-	-	-
27	A051Y983	2 Bearing Adaptor Kit SAE 0 (G-H)	1	-	-	-
27	A054Y386	2 Bearing Adaptor Kit SAE 00 (J-K)	1	-	-	-
Not Shown	45-0281	Kluber Grease 400g	1	Yes	B	M

Copyright © 2025 Cummins Inc.

41 P80 One Bearing Alternator

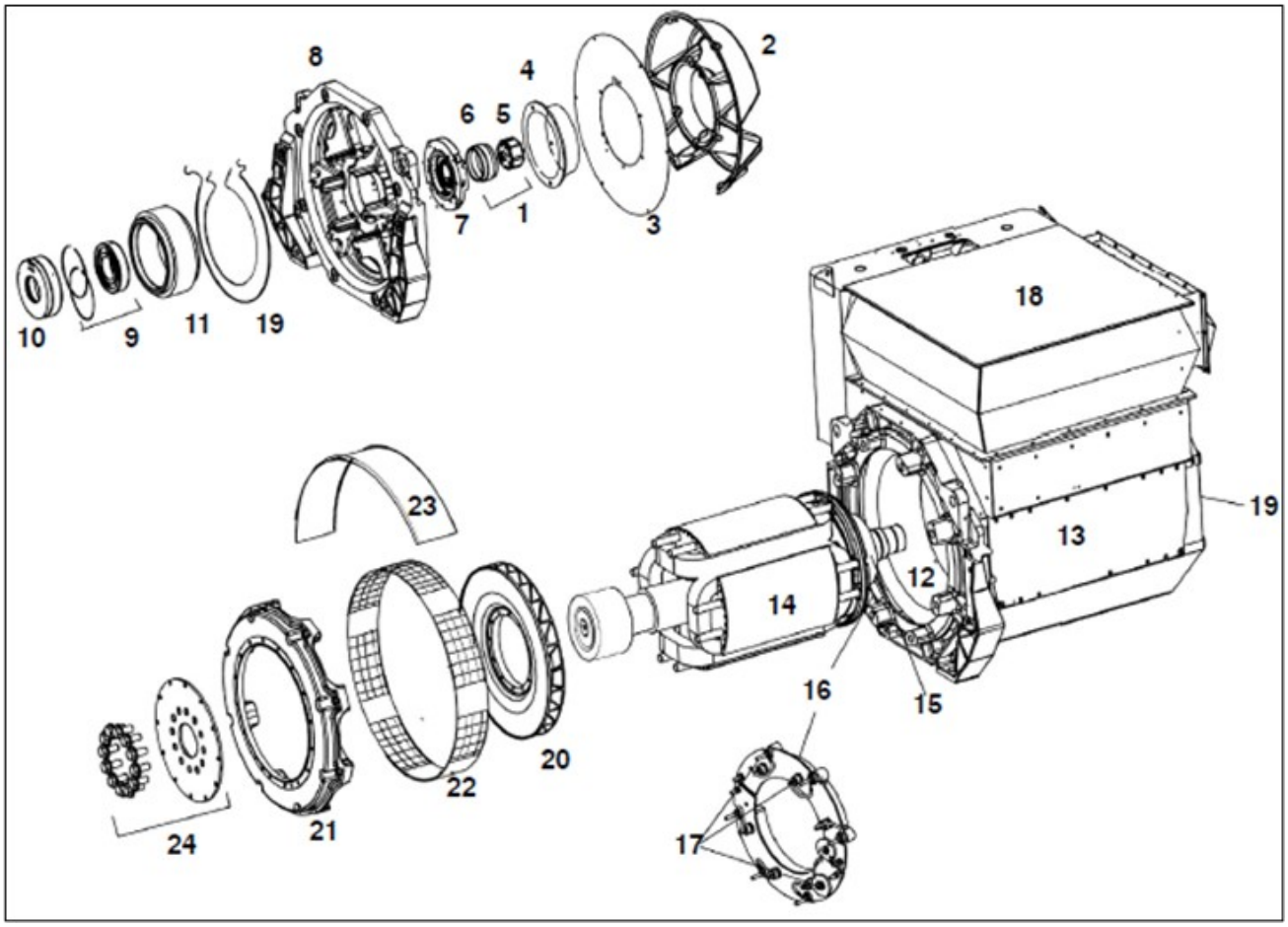

FIGURE 40. P80 ONE BEARING PARTS DRAWING

TABLE 41. P80 ONE BEARING PARTS LIST

Item	Part No.	Description	Qty.	Recommended Service Part	RSL Class	RSL Type
1	45-1082	PMG Rotor/Stator Repair Kit	1	Yes	A	SC
2	800-30843	NDE Air Inlet Cover	1	-	-	-
3	800-30060	NDE Air Inlet Screen	1	-	-	-
4	450-14360	PMG Cover (Metal)	1	-	-	-
5	SEE ITEM. 1	Current PMG Rotor/Stator Repair Kit	1	-	-	-
6	SEE ITEM. 1	Current PMG Rotor/Stator Repair Kit	1	-	-	-
7	800-30017	NDE Bearing Cap	1	-	-	-
8	800-30020	NDE Endbracket	1	-	-	-
9	45-1118	NDE Bearing Kit With Cap And Cartridge	1	Yes	B	M
9	45-0407	NDE Bearing Kit	1	Yes	B	M

 Copyright © 2025 Cummins Inc.

Item	Part No.	Description	Qty.	Recommended Service Part	RSL Class	RSL Type
10	800-30015	NDE Bearing Cartridge	1	-	-	-
11	800-1055	Exciter Stator (R-T)	1	Yes	A	SC
11	800-1056	Exciter Stator (W-Y)	1	Yes	A	SC
12	QMSN	Main Stator Frame Assembly	1	-	-	-
13	QMSN	Main Stator Panel Work	1	-	-	-
14	QMSN	Main Rotor Assembly	1	-	-	-
15	800-1048	Exciter Rotor (R-T)	1	Yes	A	SC
15	800-1049	Exciter Rotor (W-Y)	1	Yes	A	SC
16	810-1015	Rectifier Assembly	1	Yes	A	SC
17	RSK-6001	Diode Forward/Reverse And Varistor Kit	1	Yes	A	SC
18	QMSN	Complete Terminal Box Assembly	1	-	-	-
19	45-1029	Heater Kit	1	-	-	-
20	800-30014	Fan (Anti-Clockwise)	1	-	-	-
20	800-30049	Fan (Clockwise)	1	-	-	-
21	45-1139	Adaptor SAE 0	1	-	-	-
21	45-1140	Adaptor SAE 00	1	-	-	-
21	45-1141	Adaptor Special R-T MHI	1	-	-	-
22	SEE ITEM 30	NDE Adaptor Screen (Included In Adaptor Kit)	2	-	-	-
23	800-30186	Drip Proof Cover	1	-	-	-
24	45-1144	Coupling Kit SAE 18	1	-	-	-
24	45-1145	Coupling Kit SAE 21	1	-	-	-
24	45-1146	Coupling Kit SAE 24	1	-	-	-
25	A060B914	AVR DECS-150	1	Yes	A	SC
Not Shown	A044W725	Unitrol 1010 Light	1	Yes	A	SC
Not Shown	A044W728	Unitrol 1010 Basic	1	Yes	A	SC
Not Shown	E000-13300	AVR MA330	1	Yes	A	SC
Not Shown	E000-23800	AVR DM110	1	Yes	A	SC

42 P80 Two Bearing Alternator

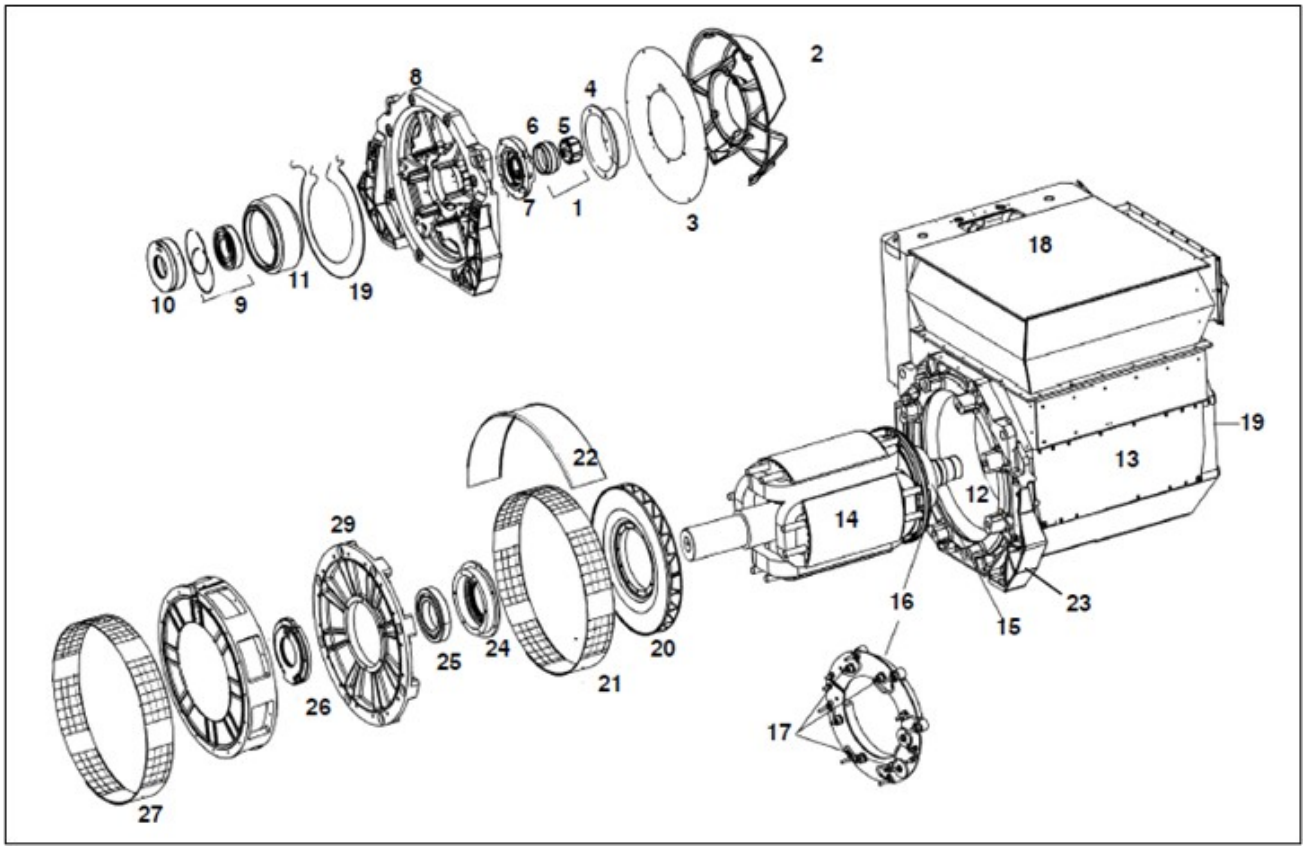

FIGURE 41. P80 TWO BEARING ALTERNATOR PARTS DRAWING

Item	Part No.	Description	Qty.	Recommended Service Part	RSL Class	RSL Type
1	45-1082	PMG Rotor/Stator Repair Kit	1	Yes	A	SC
2	800-30843	NDE Air Inlet Cover	1	-	-	-
3	800-30060	NDE Air Inlet Screen	1	-	-	-
4	450-14360	PMG Cover (Metal)	1	-	-	-
5	SEE NO. 1	Current PMG Rotor/Stator Repair Kit	1	-	-	-
6	SEE NO. 1	Current PMG Rotor/Stator Repair Kit	1	-	-	-
7	800-30017	NDE Bearing Cap	1	-	-	-
8	800-30020	NDE Endbracket	1	-	-	-
9	45-1118	NDE Bearing Kit With Cap And Cartridge	1	Yes	B	M
9	45-0407	NDE Bearing Kit	1	Yes	B	M
10	800-30015	NDE Bearing Cartridge	1	-	-	-
11	800-1055	Exciter Stator (R-T)	1	Yes	A	SC

 Copyright © 2025 Cummins Inc.

Item	Part No.	Description	Qty.	Recommended Service Part	RSL Class	RSL Type
11	800-1056	Exciter Stator (W-Y)	1	Yes	A	SC
12	QMSN	Main Stator Frame Assembly	1	-	-	-
13	QMSN	Main Stator Panel Work	1	-	-	-
14	QMSN	Main Rotor Assembly	1	-	-	-
15	800-1048	Exciter Rotor (R-T)	1	Yes	A	SC
15	800-1049	Exciter Rotor (W-Y)	1	Yes	A	SC
16	810-1015	Rectifier Assembly	1	Yes	A	SC
17	RSK-6001	Diode Forward/Reverse And Varistor Kit	1	Yes	A	SC
18	QMSN	Complete Terminal Box Assembly	1	-	-	-
19	45-1029	Heater Kit	1	-	-	-
20	800-30014	Fan (Anti-Clockwise)	1	-	-	-
20	800-30049	Fan (Clockwise)	1	-	-	-
21	800-30187	DE Bracket Screen	2	-	-	-
22	800-30186	Drip Proof Cover	1	-	-	-
23	800-30022	DE Bracket (R-T)	1	-	-	-
23	800-30165	DE Bracket (W-Y)	1	-	-	-
24	800-10475	DE Bearing Cartridge (R-T)	1	-	-	-
24	820-10137	DE Bearing Cartridge (W-Y)	1	-	-	-
25	45-1151	Both NDE And DE (R, S, T)	1	Yes	B	M
25	45-1152	Both NDE And DE (W, X, Y)	1	Yes	B	M
25	45-0408	DE Bearing Kit (R-T)	1	Yes	B	M
25	45-0409	DE Bearing Kit (W-Y)	1	Yes	B	M
25	45-1119	DE Bearing Kit With Caps And Cartridges (R, S, T)	1	Yes	B	M
25	45-1120	DE Bearing Kit With Caps And Cartridges (W, X, Y)	1	Yes	B	M
26	800-10477	DE Bearing Cap (R-T)	1	-	-	-
26	820-10138	DE Bearing Cap (W-Y)	1	-	-	-
27	45-1135	Adaptor Kit SAE 00 R -T (32 Hole)	1	-	-	-
27	45-1136	Adaptor Kit SAE 0 W-Y	1	-	-	-
27	45-1137	Adaptor Kit SAE 00 W-Y	1	-	-	-
27	45-1138	Adaptor Kit SAE 00 W-Y (32 Hole)	1	-	-	-
27	45-1142	Adaptor Kit SAE 0 R-T	1	-	-	-

Item	Part No.	Description	Qty.	Recommended Service Part	RSL Class	RSL Type
28	SEE ITEM 27	Adaptor Screen (Included In Adaptor Kit)	1	-	-	-
29	800-30046	F8 DE Bearing Carrier (R-T)	1	-	-	-
29	800-30163	F8 DE Bearing Carrier (W-Y)	1	-	-	-
Not Shown	A060B914	AVR DECS-150	1	Yes	A	SC
Not Shown	E000-13300	AVR MA330	1	Yes	A	SC
Not Shown	E000-23800	AVR DM110	1	Yes	A	SC
Not Shown	A044W725	Unitrol 1010 Light	1	Yes	A	SC
Not Shown	A044W728	Unitrol 1010 Basic	1	Yes	A	SC

 Copyright © 2025 Cummins Inc.

This page is intentionally blank.

43 S9 LV One Bearing Alternator

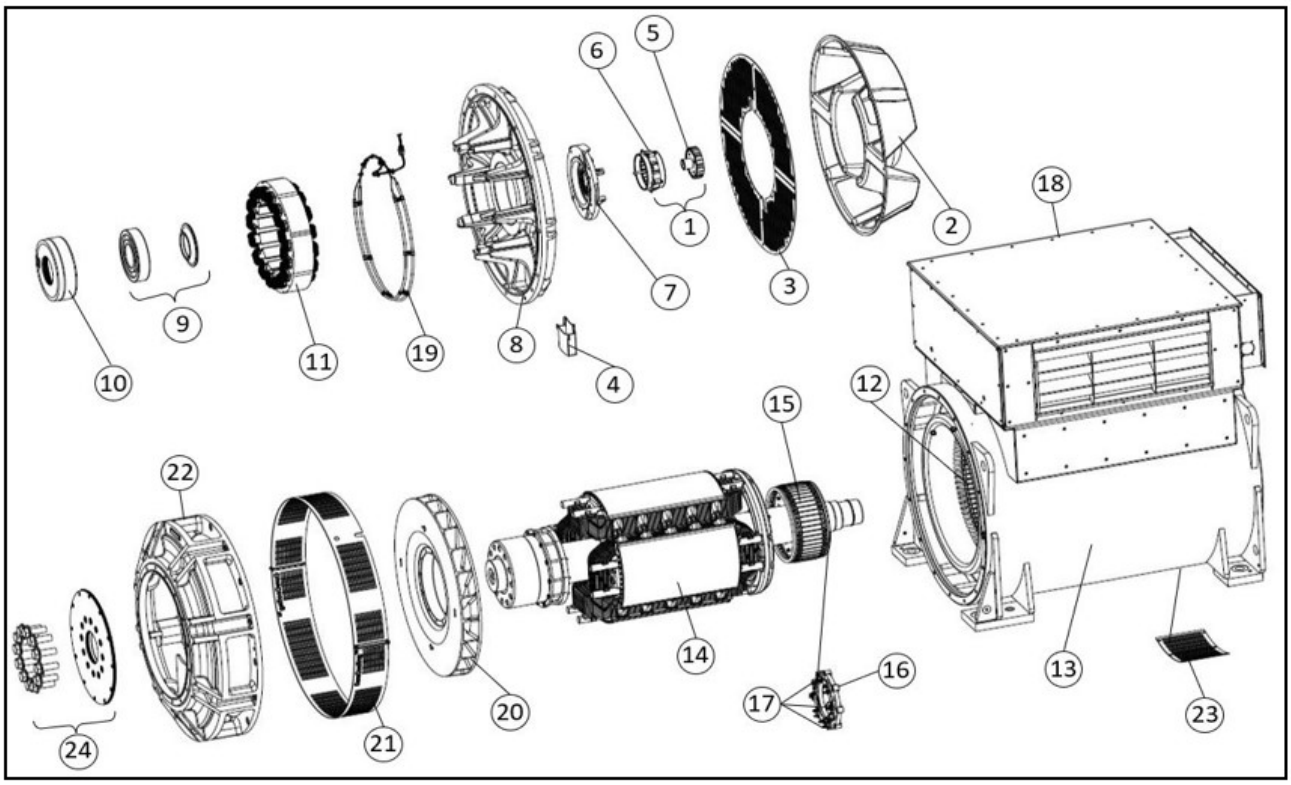

FIGURE 42. S9 LV ONE BEARING ALTERNATOR PARTS DRAWING

Item	Part No.	Description	Qty.	Recommended Service Part	RSL Class	RSL Type
1	45-1082	PMG Rotor/Stator Repair Kit	1	Yes	A	SC
2	A059V003	NDE Air Inlet Cover	1	-	-	-
3	A059U995	NDE Axial Air Inlet Screen	2	-	-	-
4	A061Y809	Grease Trap	1	-	-	-
5	SEE ITEM. 1	PMG Rotor	1	-	-	-
6	SEE ITEM. 1	PMG Stator	1	-	-	-
7	800-30017	NDE Bearing Cap (C-D)	1	-	-	-
8	A073B418	NDE End Bracket (C-D)	1	-	-	-
9	45-1118	NDE Bearing Kit With Cap And Cartridge	1	Yes	B	M
9	45-0407	NDE Bearing Kit	1	Yes	B	M
10	800-30015	NDE Bearing Cartridge	1	-	-	-
11	A065Z938	Exciter Stator 100 mm Severe Environmental (C-D)	1	Yes	A	SC
11	A071Z705	Exciter Stator 100 mm (C-D)	1	Yes	A	SC
12	QMSN	Main Stator	1	-	-	-

 Copyright © 2025 Cummins Inc.

Item	Part No.	Description	Qty.	Recommended Service Part	RSL Class	RSL Type
13	QMSN	Main Stator Enclosure	1	-	-	-
14	QMSN	Main Rotor Assembly	1	-	-	-
15	A068C492	Exciter Rotor 100 mm (C-D)	1	Yes	A	SC
16	A059Y591	Rectifier Assembly	1	Yes	A	SC
17	A063M677	Diode Forward/Reverse And Varistor Kit	1	Yes	A	SC
18	QMSN	Complete Terminal Box Assembly	1	-	-	-
19	A059S757	Heater Kit	1	Yes	C	R
20	A050A299	Fan (Clockwise) (C-D)	1	-	-	-
21	A059V001	DE Adaptor Screen Bottom	1	-	-	-
21	A061M219	DE Adaptor Screen Top	1	-	-	-
22	A064V573	DE Adaptor SAE 0 (C-D)	1	-	-	-
22	A064V440	DE Adaptor SAE 00 (C-D)	1	-	-	-
23	A059U997	NDE Radial Air Inlet Screen	1	-	-	-
24	A062D947	Coupling Kit SAE 18	1	-	-	-
24	A062D949	Coupling Kit SAE 21	1	-	-	-
Not Shown	070-58085	Bearing RTD NDE 1 or 2 (optional)	1	Yes	C	R
Not Shown	070-58085	Bearing RTD NDE 1 or 2 (optional)	1	Yes	C	R
Not Shown	070-58087	Bearing RTD DE 1 or 2 (optional)	1	Yes	C	R
Not Shown	45-0281	Kluber Grease 400g	1	Yes	B	M
Not Shown	A054S072	AVR DECS-100	1	Yes	A	SC
Not Shown	A060B914	AVR DECS-150	1	Yes	A	SC
Not Shown	CONTACT CGT	AVR Unitrol 1010	1	Yes	A	SC
Not Shown	E000-23800	AVR DM110	1	Yes	A	SC

Copyright © 2025 Cummins Inc.

44 S9 LV Two Bearing Alternator

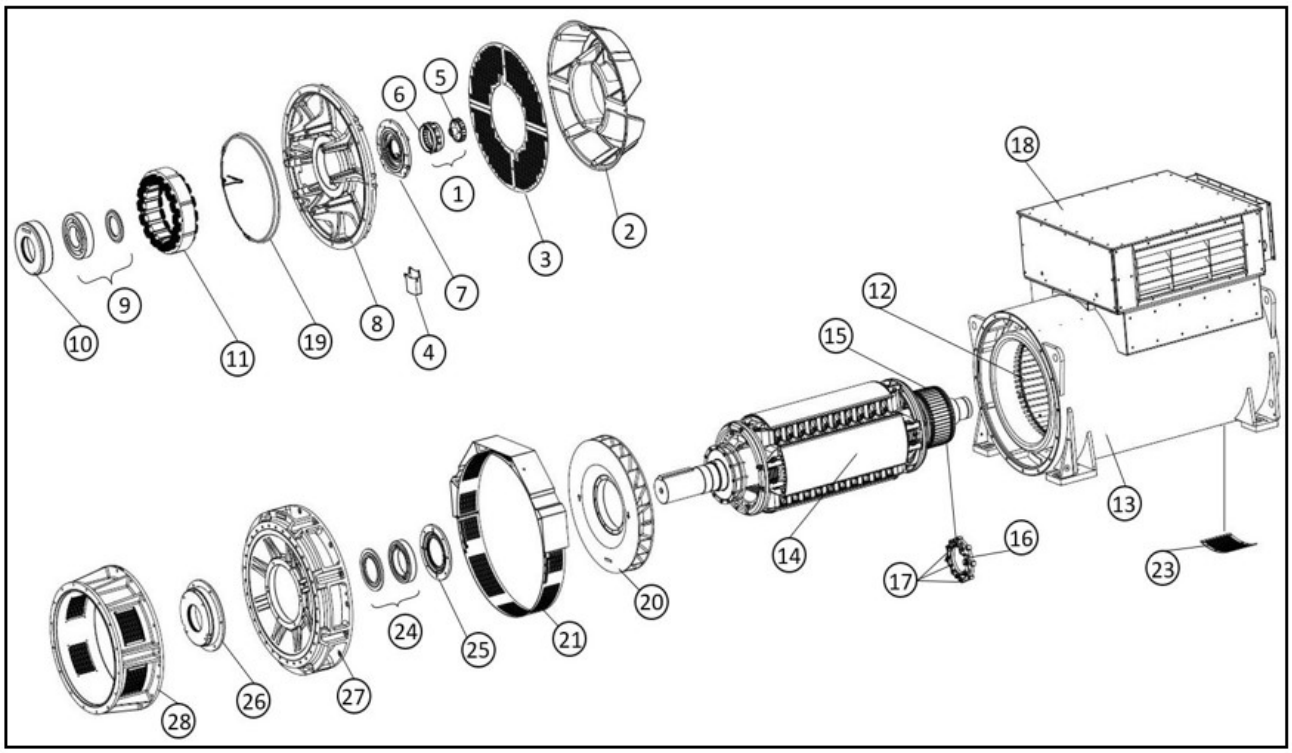

FIGURE 43. S9 LV TWO BEARING ALTERNATOR PARTS DRAWING

TABLE 42. S9 LV TWO BEARING ALTERNATOR PARTS LIST

Item	Part No.	Description	Qty.	Recommended Service Part	RSL Class	RSL Type
1	45-1082	PMG Rotor/Stator Repair Kit	1	Yes	A	SC
2	A059V003	NDE Air Inlet Cover	1	-	-	-
3	A059U995	NDE Axial Air Inlet Screen	2	-	-	-
4	A061Y809	Grease Trap	1	-	-	-
5	SEE ITEM. 1	Current PMG Rotor/Stator Repair Kit	1	-	-	-
6	SEE ITEM. 1	Current PMG Rotor/Stator Repair Kit	1	-	-	-
7	800-30017	NDE Bearing Cap (C-F)	1	-	-	-
7	A062F040	NDE Bearing Cap (G)	1	-	-	-
8	A073B418	NDE Endbracket (C-E)	1	-	-	-
8	A073B419	NDE Endbracket (G-H)	1	-	-	-
9	45-1118	NDE Bearing Kit With Cap And Cartridge (C-F)	1	Yes	B	M
9	A063M672	NDE Bearing Kit With Cap And Cartridge (G-H)	1	Yes	B	M
9	45-0407	NDE Bearing Kit (C-F)	1	Yes	B	M

 Copyright © 2025 Cummins Inc.

Item	Part No.	Description	Qty.	Recommended Service Part	RSL Class	RSL Type
9	A063M661	NDE Bearing Kit (G)	1	Yes	B	M
10	800-30015	NDE Bearing Cartridge (C-F)	1	-	-	-
10	A062E911	NDE Bearing Cartridge (G)	1	-	-	-
11	A062A095	Exciter Stator (F-G)	1	Yes	A	SC
11	A064X961	Exciter Stator 130 mm Severe Environmental (E-G)	1	Yes	A	SC
11	A065Z938	Exciter Stator 100 mm Severe Environmental (C-D)	1	Yes	A	SC
11	A071Y571	Exciter Stator 130 mm (E)	1	Yes	A	SC
11	A071Z705	Exciter Stator 100 mm (C-D)	1	Yes	A	SC
12	QMSN	Main Stator	1	-	-	-
13	QMSN	Main Stator Enclosure	1	-	-	-
14	QMSN	Main Rotor Assembly	1	-	-	-
15	A059U784	Exciter Rotor 130 mm (E-H)	1	Yes	A	SC
15	A064Y290	Exciter Rotor 130 mm Severe Environmental (E-G)	1	Yes	A	SC
15	A065Z937	Exciter Rotor 100 mm Severe Environmental (C-D)	1	Yes	A	SC
15	A066P131	Exciter Rotor (E)	1	Yes	A	SC
15	A068C492	Exciter Rotor 100 mm (C-D)	1	Yes	A	SC
16	A059Y591	Rectifier Assembly	1	Yes	A	SC
17	A063M677	Diode Forward/Reverse And Varistor Kit	1	Yes	A	SC
18	QMSN	Complete Terminal Box Assembly	1	-	-	-
19	A059S757	Heater Kit	1	Yes	C	R
20	A050A299	Fan (Clockwise) (C-F)	1	-	-	-
20	A062F872	Fan (Clockwise) (G)	1	-	-	-
21	A059U999	DE Bracket Screen Top	1	-	-	-
21	A059V001	DE Bracket Screen Bottom	1	-	-	-
23	A059U997	NDE Radial Air Inlet Screen	1	-	-	-
24	800-10475	DE Bearing Cartridge Two Bearing (C-D)	1	-	-	-
24	820-10137	DE Bearing Cartridge (E-F)	1	-	-	-
24	A062B588	DE Bearing Cartridge Two Bearing (G)	1	-	-	-
25	45-1119	DE Bearing Kit With Caps And Cartridges (C-D)	1	Yes	B	M
25	45-1120	DE Bearing Kit With Caps And Cartridges (E-F)	1	Yes	B	M

Item	Part No.	Description	Qty.	Recommended Service Part	RSL Class	RSL Type
25	45-1151	NDE And DE Kit For (C-D)	1	Yes	B	M
25	45-1152	NDE And DE Kit For (E-F)	1	Yes	B	M
25	A063M671	DE Bearing Kit With Caps And Cartridges (G)	1	Yes	B	M
25	A063M674	NDE And DE Kit For (G)	1	Yes	B	M
25	45-0408	DE Bearing Kit (C-D)	1	Yes	B	M
25	45-0409	DE Bearing Kit (E-F)	1	Yes	B	M
25	A063M660	DE Bearing Kit (G)	1	Yes	B	M
26	800-10477	DE Bearing Cap (C-D)	1	-	-	-
26	820-10138	DE Bearing Cap (E-F)	1	-	-	-
26	A062E194	DE Bearing Outer Cap (G)	1	-	-	-
26	A062E231	DE Bearing Inner Cap (G)	1	-	-	-
27	A062F695	DE Bracket (G)	1	-	-	-
27	A073A776	DE Bracket (E-F)	1	-	-	-
27	A073B167	DE Bracket (C-D)	1	-	-	-
28	A062D571	DE Adaptor Kit SAE 00 (C-D)	1	-	-	-
28	A062D573	DE Adaptor Kit SAE 0 (C-D)	1	-	-	-
28	A062D581	DE Adaptor Kit SAE 00 (E-G)	1	-	-	-
28	A062N243	DE Adaptor Kit SAE 0 (E-F)	1	-	-	-
Not Shown	070-58087	Bearing RTD DE 1 or 2 (optional)	1	Yes	C	R
Not Shown	45-0281	Kluber Grease 400g	1	Yes	B	M
Not Shown	A054S072	AVR DECS-100	1	Yes	A	SC
Not Shown	A060B914	AVR DECS-150	1	Yes	A	SC
Not Shown	CONTACT CGT	AVR Unitrol 1010	1	Yes	A	SC
Not Shown	E000-23800	AVR DM110	1	Yes	A	SC

 Copyright © 2025 Cummins Inc.

This page is intentionally blank.

45 S9 HV One Bearing Alternator

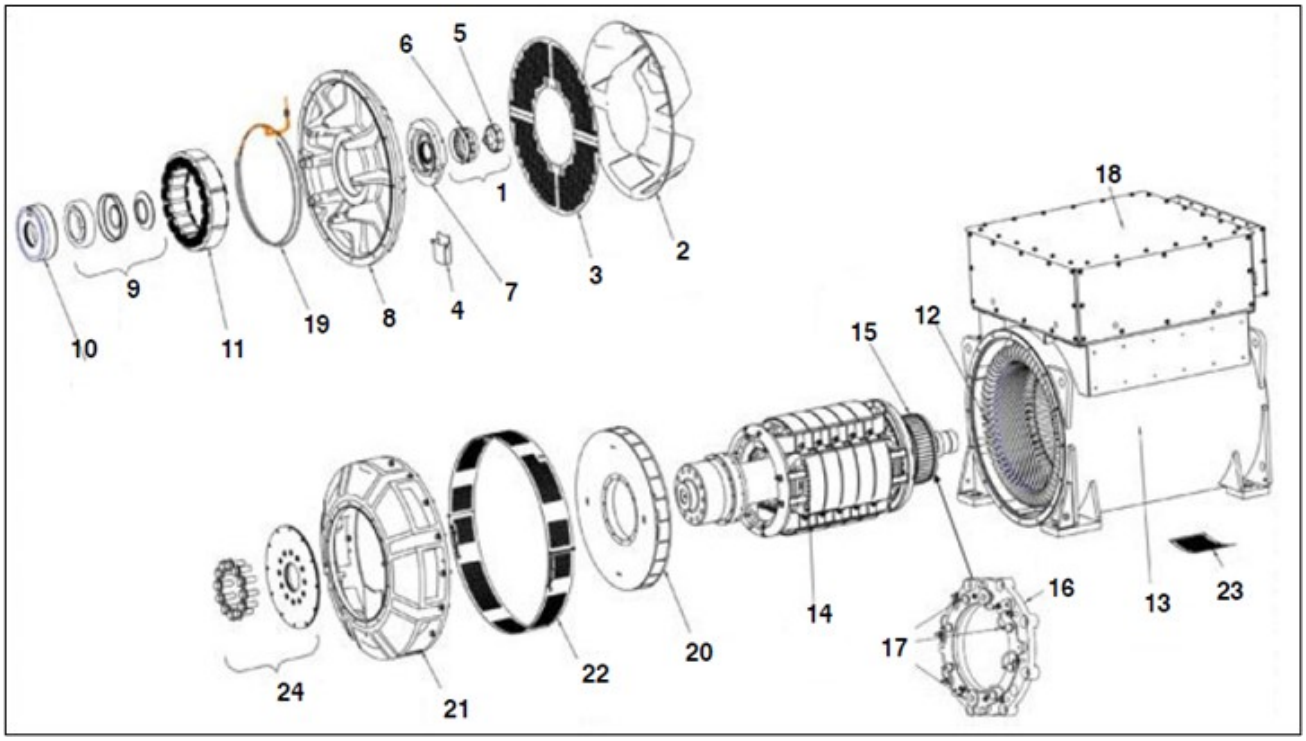

FIGURE 44. S9 HV ONE BEARING ALTERNATOR PARTS DRAWING

TABLE 43. S9 HV ONE BEARING ALTERNATOR PARTS LISTS

Item	Part No.	Description	Qty.	Recommended Service Part	RSL Class	RSL Type
1	45-1082	PMG Rotor/Stator Repair Kit	1	Yes	A	SC
2	A059V003	NDE Air Inlet Cover	1	-	-	-
3	A059U995	NDE Axial Air Inlet Screen	2	-	-	-
4	A061Y809	Grease Collector	1	-	-	-
5	SEE ITEM. 1	Current PMG Rotor/Stator Repair Kit	1	-	-	-
6	SEE ITEM. 1	Current PMG Rotor/Stator Repair Kit	1	-	-	-
7	800-30017	NDE Bearing Cap	1	-	-	-
8	A073B418	NDE End Bracket (C-D)	1	-	-	-
9	45-1118	NDE Bearing Kit With Cap And Cartridge	1	Yes	B	M
9	45-0407	NDE Bearing Kit	1	Yes	B	M
10	800-30015	NDE Bearing Cartridge	1	-	-	-
11	A062A093	Exciter Stator (A-D)	1	Yes	A	SC
11	A062A095	Exciter Stator (E)	1	Yes	A	SC
12	QMSN	Main Stator	1	-	-	-

 Copyright © 2025 Cummins Inc.

Item	Part No.	Description	Qty.	Recommended Service Part	RSL Class	RSL Type
13	QMSN	Main Stator Enclosure	1	-	-	-
14	QMSN	Main Rotor Assembly	1	-	-	-
15	A059U784	Exciter Rotor (E)	1	Yes	A	SC
15	A061X633	Exciter Rotor 100 mm (A-D)	1	Yes	A	SC
16	A059Y591	Rectifier Assembly	1	Yes	A	SC
17	A063M677	Diode Forward/Reverse And Varistor Kit	1	Yes	A	SC
18	QMSN	Complete Terminal Box Assembly	1	-	-	-
19	A059S757	Heater Kit	1	Yes	C	R
20	800-30049	Fan (Clockwise) (A-B)	1	-	-	-
20	A050A299	Fan (Clockwise) (C-D)	1	-	-	-
21	A064V438	Adaptor SAE 0 (A-B)	1	-	-	-
21	A064V439	Adaptor SAE 00 A-B	1	-	-	-
21	A064V440	Adaptor SAE 00 (C-D)	1	-	-	-
21	A064V573	Adaptor SAE 0 (C-D)	1	-	-	-
22	A059V001	DE Adaptor Screen Bottom	1	-	-	-
22	A061M219	DE Adaptor Screen Top	1	-	-	-
23	A059U997	Radial Air Inlet Screen	1	-	-	-
24	A062D947	Coupling Kit SAE 18	1	-	-	-
24	A062D949	Coupling Kit SAE 21	1	-	-	-
Not Shown	45-0281	Kluber Grease 400g	1	Yes	B	M
Not Shown	A054S072	AVR DECS-100	1	Yes	A	SC
Not Shown	A060B914	AVR DECS-150	1	Yes	A	SC
Not Shown	A062K080	AVR DVC310	1	Yes	A	SC
Not Shown	CONTACT CGT	AVR Unitrol 1010	1	Yes	A	SC
Not Shown	E000-23800	AVR DM110	1	Yes	A	SC

46 S9 HV Two Bearing Alternator

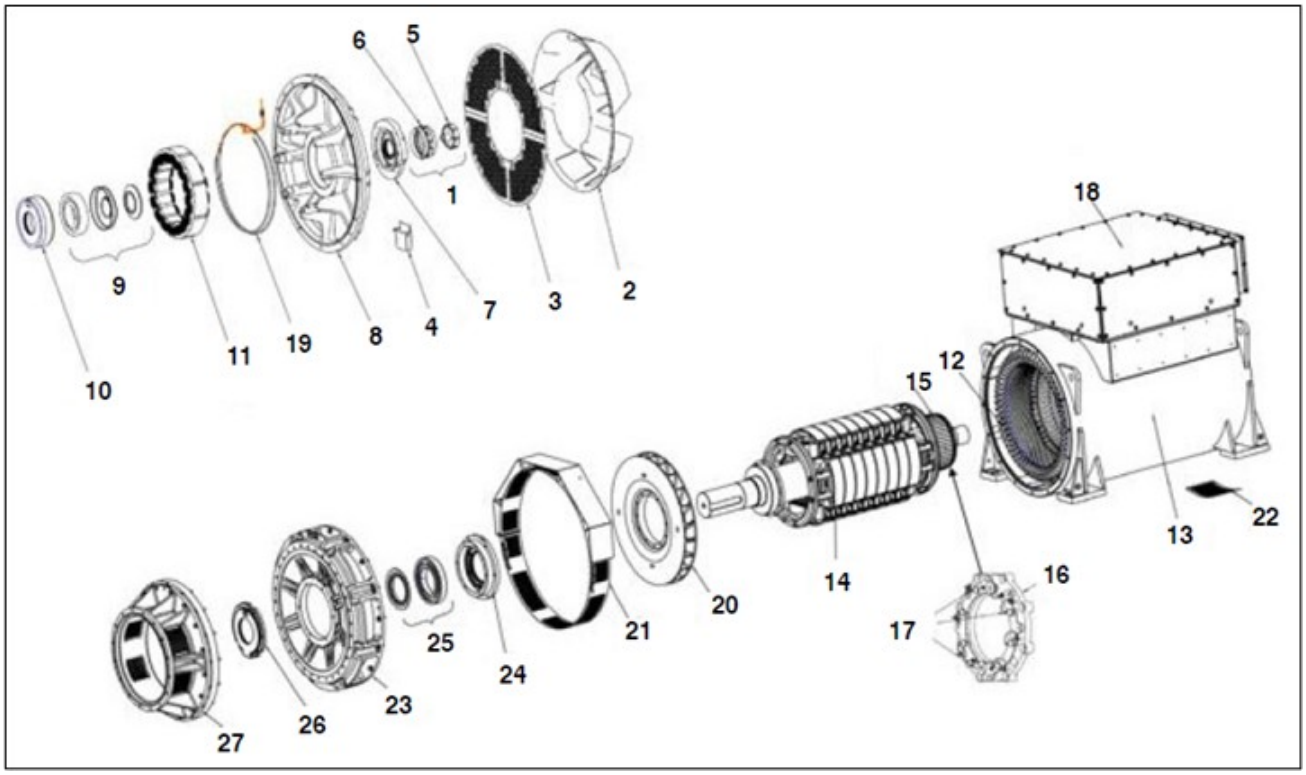

FIGURE 45. S9 HV TWO BEARING ALTERNATOR PARTS DRAWING

TABLE 44. S9 HV TWO BEARING ALTERNATOR PARTS LIST

Item	Part No.	Description	Qty.	Recommended Service Part	RSL Class	RSL Type
1	45-1082	PMG Rotor/Stator Repair Kit	1	Yes	A	SC
2	A059V003	NDE Air Inlet Cover	1	-	-	-
3	A059U995	NDE Axial Air Inlet Screen	2	-	-	-
4	A061Y809	Grease Collector	1	-	-	-
5	SEE NO. 1	Current PMG Rotor/Stator Repair Kit	1	-	-	-
6	SEE NO. 1	Current PMG Rotor/Stator Repair Kit	1	-	-	-
7	800-30017	NDE Bearing Cap (A-F)	1	-	-	-
7	A062F040	NDE Bearing Cap (G-H)	1	-	-	-
8	A073B418	NDE Endbracket (C-E)	1	-	-	-
8	A073B419	NDE Endbracket (G-H)	1	-	-	-
9	45-1118	NDE Bearing Kit With Cap And Cartridge (A-F)	1	Yes	B	M
9	45-0407	NDE Bearing Kit (A-F)	1	Yes	B	M
9	A063M661	NDE Bearing Kit (G-H)	1	Yes	B	M

 Copyright © 2025 Cummins Inc.

Item	Part No.	Description	Qty.	Recommended Service Part	RSL Class	RSL Type
9	A063M672	NDE Bearing Kit (G-H) With Cap And Cartridge	1	Yes	B	M
10	800-30015	NDE Bearing Cartridge (A-F)	1	-	-	-
10	A062E911	NDE Bearing Cartridge (G-H)	1	-	-	-
11	A062A093	Exciter Stator (A-D)	1	Yes	A	SC
11	A062A095	Exciter Stator (E-H)	1	Yes	A	SC
11	A064X961	Exciter Stator 130 mm Severe Environmental (E-H)	1	Yes	A	SC
12	QMSN	Main Stator	1	-	-	-
13	QMSN	Main Stator Enclosure	1	-	-	-
14	QMSN	Main Rotor Assembly	1	-	-	-
15	A059U784	Exciter Rotor 130 mm (E-H)	1	Yes	A	SC
15	A061X633	Exciter Rotor 100 mm (A-D)	1	Yes	A	SC
15	A064Y290	Exciter Rotor 130 mm Severe Environmental (E-H)	1	Yes	A	SC
16	A059Y591	Rectifier Assembly	1	Yes	A	SC
17	A063M677	Diode Forward/Reverse And Varistor Kit	1	Yes	A	SC
18	QMSN	Complete Terminal Box Assembly	1	-	-	-
19	A059S757	Heater Kit	1	Yes	C	R
20	800-30049	Fan (Clockwise) (A-B)	1	-	-	-
20	A050A299	Fan (Clockwise) (C-F)	1	-	-	-
20	A062F872	Fan (Clockwise) (G-H)	1	-	-	-
21	A059U999	DE Bracket Screen Top	1	-	-	-
21	A059V001	DE Bracket Screen Bottom	1	-	-	-
22	A059U997	Radial Air Inlet Screen	1	-	-	-
23	A073B167	DE Bracket (C-D)	1	-	-	-
23	A073A776	DE Bracket (E-F)	1	-	-	-
23	A061V805	DE Bracket (A-B)	1	-	-	-
23	A062F695	DE Bracket (G-H)	1	-	-	-
24	800-10475	DE Bearing Cartridge (A-D)	1	-	-	-
24	820-10137	DE Bearing Cartridge (E-F)	1	-	-	-
24	A062B588	DE Bearing Cartridge (G-H)	1	-	-	-
25	45-1151	NDE And DE Kit For (C-D)	1	Yes	B	M
25	45-1152	NDE And DE Kit For (E-F)	1	Yes	B	M
25	A063M674	NDE And DE Kit For (G-H)	1	Yes	B	M

Copyright © 2025 Cummins Inc.

Item	Part No.	Description	Qty.	Recommended Service Part	RSL Class	RSL Type
25	45-0408	DE Bearing Kit (A-D)	1	Yes	B	M
25	45-0409	DE Bearing Kit (E-F)	1	Yes	B	M
25	45-1119	DE Bearing Kit With Caps And Cartridges (A-D)	1	Yes	B	M
25	45-1120	DE Bearing Kit With Caps And Cartridges (E-F)	1	Yes	B	M
25	A063M660	DE Bearing Kit (G-H)	1	Yes	B	M
25	A063M671	DE Bearing Kit (G)-H With Caps And Cartridges	1	Yes	B	M
26	800-10477	DE Bearing Cap (A-D)	1	-	-	-
26	820-10138	DE Bearing Cap (E-F)	1	-	-	-
26	A062E194	DE Bearing Outer Cap (G-H)	1	-	-	-
26	A062E231	DE Bearing Inner Cap (G-H)	1	-	-	-
27	A062D571	Adaptor Kit SAE 00 (A-D)	1	-	-	-
27	A062D573	Adaptor Kit SAE 0 A-D	1	-	-	-
27	A062D581	Adaptor Kit SAE 00 (E-H)	1	-	-	-
27	A062N243	Adaptor Kit SAE 0 (E-F)	1	-	-	-
Not Shown	45-0281	Kluber Grease 400g	1	Yes	B	M
Not Shown	A054S072	AVR DECS-100	1	Yes	A	SC
Not Shown	A060B914	AVR DECS-150	1	Yes	A	SC
Not Shown	A062K080	AVR DVC310	1	Yes	A	SC
Not Shown	CONTACT CGT	AVR Unitrol 1010	1	Yes	A	SC
Not Shown	E000-23800	AVR DM110	1	Yes	A	SC

 Copyright © 2025 Cummins Inc.

This page is intentionally blank.

47 Accessories

TABLE 45. ACCESSORIES

Range	Description	Part Number	Amps	Additional Information
Droop Kits				
P0	Generator Current Transformer	191−1077		
P1	Generator Current Transformer	191−1077		
UC22	Reg Control Transformer Kit	45−0997	Up to 60	
UC22	Reg Control Transformer Kit	45−0091	60 − 200	
UC22	Reg Control Transformer Kit	45−0092	201 − 400	
UC22	UL Reg Control Transformer Kit	A055M646	55 − 110	
UC22 / UC27	UL Reg Control Transformer Kit	A055M944	110 − 200	
UC27	Reg Control Transformer Kit	45−0092	201 − 600	
UC27	Reg Control Transformer Kit	45−0091	111 − 201	
UC27	UL Reg Control Transformer Kit	A055M939	201 − 400	
HC4 / S4	Reg Control Transformer Kit	45−0091	111 − 201	
HC4 / S4	Reg Control Transformer Kit	45−0583	201 − 600	
HC4 / S4	UL Reg Control Transformer Kit	A055L757	201 − 1250	
HC4 / S4	Droop CT Kit for Digital AVR	A048W476	130 − 1600	
HC4 / S4	Droop CT Kit for Digital AVR	A062Y082	1601 − 4000	
HC5 / S5	Reg Control Transformer Kit	45−0588	Up to 600	
HC5 / S5D / S5/ HC6 / S6D / S6	Reg Control Transformer Kit	45−0691	600 − 1200	
HC5 / S5D / S5	UL Reg Control Transformer Kit	A055L766	300 − 1200	Differential Protection
HC5 / S5D / S5	Droop CT Kit for Digital AVR	A048W468	0 − 1040	Differential Protection
HC5 / S5	UL Reg Control Transformer Kit	A055Z381	300 − 1200	
HC5 / S5D / S5	Droop CT Kit for Digital AVR	A061T978	1041−2400	
HC5 / S5	Droop CT Kit for Digital AVR	A062H942	1041−1400	
HC5 / S5D / S5/ HC6 / S6D / S6	Droop CT Kit for Digital AVR	A048W470	0−1040	Dual Function CT
HC6	UL Reg Control Transformer Kit	A055Y527	1000 − 4000	

 Copyright © 2025 Cummins Inc.

Range	Description	Part Number	Amps	Additional Information
HC6	UL Reg Control Transformer Kit	A055Y459	0 − 999	
HC6	Droop CT Kit for Digital AVR	A048T546	440 − 4000	Differential Protection
HC6 / S6	Droop CT Kit for Digital AVR	A048T544	440 − 4000	
HC6 / S6	Droop CT kit for digital AVR	A055C983	0 − 1400	
P7 / S7 (4 Pole)	Reg Control Transformer Kit	45−1056	Up to 2399	
P7 / S7 (4 Pole)	Reg Control Transformer Kit	45−1024	2400 − 4000	
P7 / S7 (6 Pole)	Reg Control Transformer Kit	45−1024	900 − 1499	
P7 / S7 (6 Pole)	Reg Control Transformer Kit	45−1024	1800 − 3000	
P7 / S7 (4 Pole)	UL Reg control Transformer Kit	A056E370	1 − 1199	
P7 / S7 (4 Pole)	UL Reg Control Transformer Kit	A055M537	1200 − 1999	
P7 / S7 (4 Pole)	UL Reg Control Transformer Kit	A056G433	2000 − 2399	
P7 / S7 (4 Pole)	UL Reg Control Transformer Kit	A056E420	2400 − 4000	
P7 / S7 (4 Pole)	Droop CT Kit for Digital AVR	A048W361	1206 − 4000	
P7 / S7 (4 Pole)	Droop CT Kit for Digital AVR	A048W381	1206 − 4000	Differential Protection
P7 / S7 (4 Pole)	Droop CT Kit for Digital AVR	A052T928	1 − 1205	
P7 / S7 (4 Pole)	Droop CT Kit for Digital AVR	A052T963	1 − 1205	Differential Protection
P7 / S7 (6 Pole)	Droop CT Kit for Digital AVR	A060N717	1 − 1200	
P7 / S7 (6 Pole)	Droop CT Kit for Digital AVR	A060P546	1201 − 4000	
P80		QMSN		
S9	Droop CT Kit for Digital AVR	A062H455	110 − 150	
S9	Droop CT Kit for Digital AVR	A062H505	150 − 197	
S9	Droop CT Kit for Digital AVR	A062H509	197 − 270	
S9	UL Droop CT Kit for Digital AVR	A062W045	75 − 110	

Range	Description	Part Number	Amps	Additional Information
S9	UL Droop CT Kit for Digital AVR	A062W064	270 − 370	
S9	UL Droop CT Kit for Digital AVR	A062W065	370 − 490	
S9	UL Droop CT Kit for Digital AVR	A062W071	490 − 655	
S9	UL Droop CT Kit for Digital AVR	A062W072	655 − 880	
Air Filter Kits				
UC22	Air Filter Kit	45−0875		
UC27	Air Filter Kit	45−0878	To end of October 2005	
ALL BC	Air Filter Kit	45−0769	From November 2005	
HC4 / S4	Air Filter Kit	45−0883		
HC5	Air Filter Kit	45−0315		
P7	Air filter kit	45−1023	Standard Terminal Box Industrial	
P7	Air filter kit	45−1039	Standard Terminal Box Marine	
P7	Air filter kit	45−1062	High Terminal Box Industrial	
P7	Air filter kit	45−1063	High Terminal Box Marine	
P7	Air filter kit	G CORE	Not currently covered by a kit	
Terminal Box Assembly				
All BC	Terminal Box Standard Assembly	45−0861		
All BC	Terminal Box Standard Assembly	45−1027		
BC184 H−J cores	3PH Terminal Box Kit	45−1040		
UC27	Terminal Box Kit	45−0890		
Power Factor Controller				
All Ranges	PCB Version	E000−22090		
All Ranges	Complete Assembly in Steel	E000−12090		

 Copyright © 2025 Cummins Inc.

Range	Description	Part Number	Amps	Additional Information
ELECTRONIC MODULES				
All Ranges	Frequency Detection Module 12 V	E000−21041		
All Ranges	Frequency Detection Module 24 V	E000−21042		
All Ranges	Excitation Loss 24 V	E000−22062		
All Ranges	Excitation Loss 12 V	E000−22063		
All Ranges	Manual Voltage Regulator	450−11400	UPFIT KIT 45−0506	
All Ranges	Diode Failure Detector	E000−12025		
All Ranges	RFI Suppression Assembly	E000−22080		
All Ranges	3-PH Rectifier Assembly	E000−22016		
Hand Trimmers				
	For: MX321/SX421	071−01037		
	For: MX341,SX440/465/460 AS440	071−01649		
Isolation Transformers				
UC22	1:1 Transformer Assembly	E000−22070/P		
UC27	1:1 Transformer Assembly	E000−22070/P		
HC4 / S4	1:1 Transformer Assembly	E000−22070/P		
HC5	1:1 Transformer Assembly	E000−22070/P		
HC6 / HC7	2:1 Isolation Transformer and Bracket Assembly 480:240	450−42100		
HC6 / HC7	2.5:1 Isolation Transformer and Bracket Assembly 600:240	450−42200		
HC6 / HC7	3:1 Isolation Transformer and Bracket Assembly 720:240	450−42300		
S7 HV	Voltage Transformer	A062K556	1 & 2 BEARING	
Bearing RTD’S				
P7	NDE RTD Kit	45−1097		
P7	DE RTD Kit	45−1096		
P7	NDE & DE RTD Kit	45−1095		

Range	Description	Part Number	Amps	Additional Information
P80	Bearing RTD	070−58085		
S9	Bearing RTD Kit 2 Bearing 1 RTD Per Bearing	A061G928		
S9	Bearing RTD Kit 1 Bearing 1 RTD Per Bearing	A061G930		
S9	Bearing RTD Kit 1 Bearing 2 RTD Per Bearing	A061G933		
S9	Bearing RTD Kit 2 Bearing 2 RTD Per Bearing	A062D893		

 Copyright © 2025 Cummins Inc.

This page is intentionally blank.

Copyright 2025. Cummins Generator Technologies. All rights reserved.
Cummins and the Cummins logo are registered trademarks of Cummins Inc.
STAMFORD®, AvK® , STAMFORD VITA™ , MX321™ and MX322™ are registered trademarks of Cummins Generator Technologies Ltd.